

浙江浙柜电气有限公司
浙江浙柜进出口有限公司
浙江省温州市乐清市经济开发区纬十一路316号

Zhejiang Zhegui Electric Co., Ltd
Zhejiang Zhegui Imp& Exp Co., Ltd
Road Economic Development District,Yueqing City,
Wenzhou City, Zhejiang Province, China

⚠ 本资料由浙江浙柜电气监制,仅用于展示本企业产品资料的相关信息,浙江浙柜电气随时可能因样本资料更新而改进本资料相关内容，或对本资料的印刷错误及不准确的信息进行必要的改进和更改，恕不另行通知。

This material is produced under the supervision of Zhejiang Zhegui Electric, and is only used to show the relevant information of the company's product information. Zhejiang zhegui Electric may improve the relevant content of this material at any time due to the updating of the sample data, or make necessary improvements and changes to the printing errors and inaccurate information in this material without prior notice.

采用环保纸印刷，珍惜资源，善待环境。
Use environmentally friendly paper printing, cherish resources, treat the environment.

© 浙江浙柜电气有限公司版权所有。
Zhejiang zhegui Electric Co., LTD. All rights reserved.

Giantele®



Professional lock manufacturer
专业锁具制造商

环保材质 Environmentally friendly material
匠心制造 Craftsmanship
钻石品质 Diamond quality

产品选型手册

PRODUCT MANUAL



公司简介
COMPANY PROFILE

浙江浙柜电气有限公司主营产品为低高压开关柜、中高压开关柜、变压器、断路器以及各种电气配件等。我们提供OEM服务并且接受定制订单。我们拥有一支由机械，电气自动化，计算机硬件和软件设计领域的人才组成的专业团队，为您提供强大的技术支持。我们注重质量把控和客户服务，拥有专业的团队随时满足您的需求。

Zhejiang Zhegui Electric Co., Ltd is specialize in Low Voltage Switchgear, Medium and High Voltage Switchgear, Transformers, Circuit Breakers, and various electrical accessories.We offer OEM services and accept custom orders. We have built a professional team comprising talents from machinery, electrical automation, and computer hardware and software design to provide you with robust technical support.We prioritize quality control and customer service, with a knowledgeable team ready to meet your needs.

公司成就
COMPANY ACHIEVEMENT

2010 年
浙柜成立于2010年
2010 zhegui Company was established.

14 年
14年的持续发展
14 years of continuous development.

60台
高新机械设备
60 sets of high-tech machinery and equipment.

50+
产品出口海外50多个国家
The products are exported to more than 50 countries overseas.

Zhejiang Zhegui Electric Co., Ltd.

CATALOGUE

目 录

A 转舌锁 CAM Lock

B 平面锁 Plane Lock

C 把手锁 Handle Lock

D 连杆锁 ROD control Lock

E 铰 链 Hinge

F 拉 手 Handles

G 搭 扣 Toggle and hook

H 附 件 Accessories



Zhejiang Zhegui Electric Co., Ltd.

Giantele®

转舌锁
CAM Lock

001 MS400-1

001 MS401-1

002 MS401-1十字铜芯锁

002 MS402-1

003 MS403

003 MS403-A

004 MS407

004 MS414

005 MS418

005 MS604

006 MS704-1 MS704-2

007 MS705-2

007 MS705-3A(圆形)

008 MS705-3A(三角)

008 MS705-3B

009 MS705-3

009 MS705(翼型)

010 MS705(三角)

010 MS705(月牙孔)

011 MS705(一字)

011 MS705(内四角)

012 MS705(内六角)

012 MS705-40

013 MS705-62

013 MS714-2

014 MS714-3

014 MS715

015 MS748

015 MS813

016 MS816

016 MS817

017 MS6018

017 高压柜锁

018 老型基业锁

018 新型基业锁

平面锁
Plane Lock

019 AB103

019 新AB401

019 新AB402

019 新AB403

020 老AB402-1

020 老AB402-2

020 老AB403-1

020 老AB403-2

021 AB301

021 AB301-1

021 AB301-1-1

021 AB302-1

021 AB303-1

022 MS380-1（亚光）

022 MS380-1（亮白）

022 MS380-2（亚黑）

022 MS380-3

023 MS503

023 MS505-1(右)

023 MS505-2(左)

024 MS509-1(亚光)

024 MS509-1(亮铬)

024 MS509-2(亚光)

Zhejiang Zhegui Electric Co., Ltd.

Giantele®


024
MS509-2(亮铬)


024
MS618-1


024
MS618-2


025
MS603-1(R)


025
MS603-2(R)


025
MS603-1(W)


025
MS603-2(W)


026
MS606-1(白色)


026
MS606-1(黑色)


026
MS606-2(白色)


026
MS606-2(黑色)


027
MS609-1


027
MS609-2


027
MS708

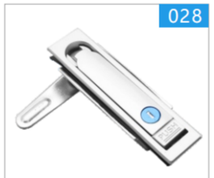
028
MS712-1

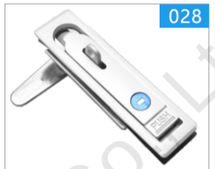
028
MS712-1-1


028
MS713-1


028
MS713-1-1


029
MS717-1(黑色)


029
MS717-1(白色)


029
MS717-2(黑色)


029
MS717-2(白色)


030
MS730-1


030
MS730-2


030
MS819(黑色)


030
MS819(白色)

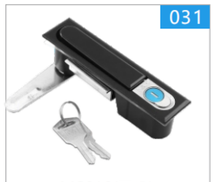
031
MS818(黑色)

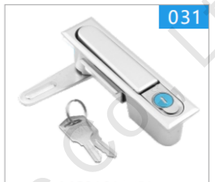
031
MS818(白色)

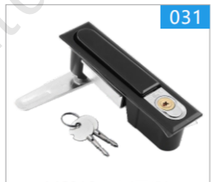
031
MS818十字(黑色)

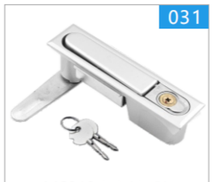
031
MS818十字(白色)


032
MS887


032
MS888

把手锁
Handle Lock


033
A17-1


033
A17-2

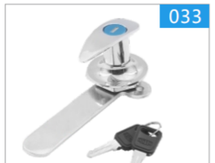
033
A19-1


033
A19-2

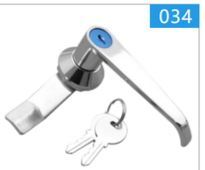
034
MS301-1

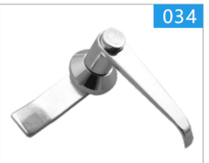
034
MS301-A

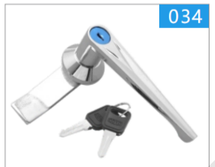
034
新MS301-1


034
新MS301-A-1

035
MS302-1

035
MS302-A

035
MS305-1

035
MS305-A

036
MS303-1

036
MS303-A

036
新MS303-1

036
新MS303-A-1

037
MS304-1

037
MS304-A

037
MS304-A-1

037
新型MS304-1

037
新型MS304-A

038
MS306-1

038
MS306-2

038
MS306-1-A

038
MS306-1-A(钢)

039
MS307

039
MS317

Zhejiang Zhegui Electric Co., Ltd.

Giantele®

040
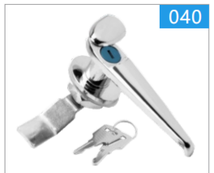
MS308-2

040
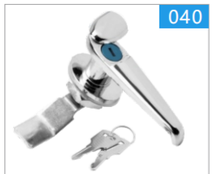
MS308-3

040
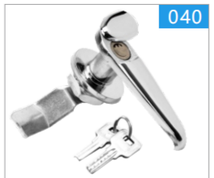
MS308-3（月牙）

040
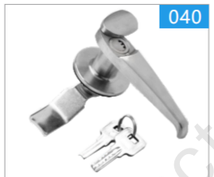
MS308-3（月牙钢）

041
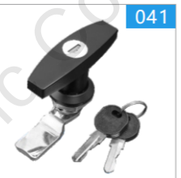
MS324-1

041

MS324-2

041
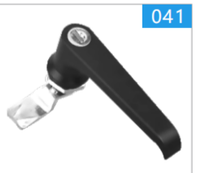
MS324-3

042
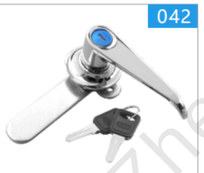
A45-1

042

A45-2

连杆锁
ROD control Lock

043

MS731(黑色)

043

MS731(白色)

043

MS731-4(黑色)

043

MS731-4(白色)

044

MS801-1

044

MS801-1-1

044

MS807-1

044
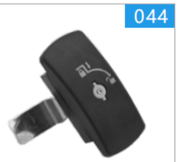
MS807-2

045

MS820(三角)

045

MS820(翼型)

045

MS821

046

MS828(黑色)

046

MS828(银色)

046

MS829(黑色)

046
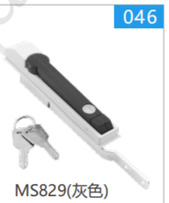
MS829(灰色)

047

MS830(黑色)

047

MS830(银色)

047

MS830(米色)

047

MS830-3(翼型)

047

MS830-3(一字)

048
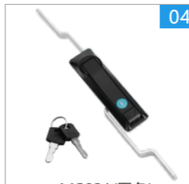
MS831(黑色)

048

MS831(银色)

048

MS819

049

MS832-1

049
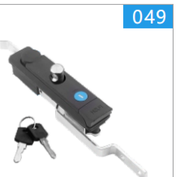
MS832-1P

049

MS833-1

049
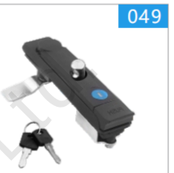
MS833-1P

050

MS840-1

050

MS840-1P

050

MS853

051

MS867-2

051

MS867-8

051

新GGD-1

051

新GGD-2

铰链
Hinge

052

HX002

052

HX027

053

HX030

053

抽屉柜铰链24

053

抽屉柜铰链34

054

HX040钢

054

HX201-1

055

HX201-2

055

HX201-3

056

HX203-1

056

HX203-2

057

HX203-3

057

HX204-3

058

HX204-1

058

HX206-1

Zhejiang Zhegui Electric Co., Ltd.

Giantele®

059 HX208

059 HX209（亚黑）

059 HX209-A（亮光）

059 HX209-1C（亚光）

060 HX209-2

060 HX209-2-A

060 HX230

061 HX212-1

061 HX212-2

062 HX218-40(亚黑)

062 HX218-50(亮白)

062 HX218-60(亚光)

063 HX219

063 HX225-1

063 HX225-2

063 HX225-3

064 HX233

064 HX226-3

064 HX226-4

065 HX226-40(亚黑)

065 HX226-50(亚光)

065 HX226-60(亮白)

066 HX226-5A

066 HX226-5

067 HX234

067 HX235

068 HX253

068 F45

068 F65

069 HX238-1

069 HX238-2

069 HX238-3

拉手
Handles

070 LS506

070 LS507

071 LS511

071 LS518

072 LS505

072 LS522

073 LS523

073 LS528-1

LS528-2

搭扣
Toggle and hook

074 735-2(灰色)

074 735-2(米色)

074 735-2(黑色)

074 735-2(白色)

075 DKS-1(大号亚黑)

075 DKS-1(小号亚光)

075 DKS-2(大号亚黑)

075 DKS-2(小号亚光)

附件
Accessories

076 HX01

076 HX001

076 HX01-1
HX01-2
HX01-3

Zhejiang Zhegui Electric Co., Ltd.

MS400-1



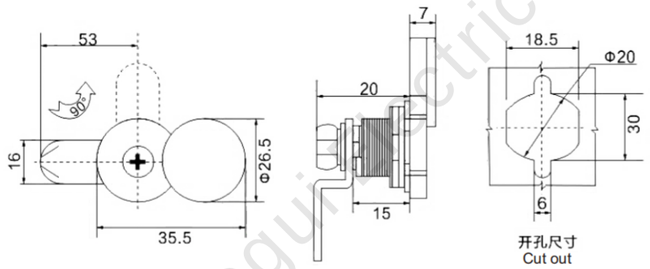

材质：锌合金
表面处理或颜色：电镀亮铬
适用门板厚度：1-5mm

Material:zinc alloy.
Surface treatment or color:bright chrome plating.
Applicable door thickness:1-5mm.

MS401-1(十字铜芯)

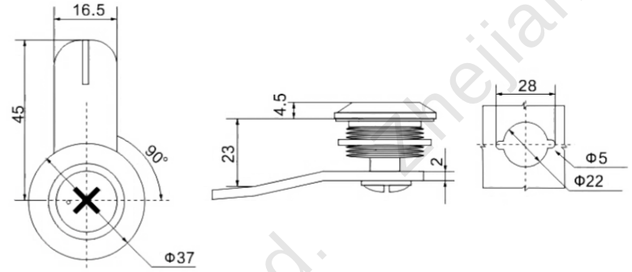

材质：锌合金、铜
表面处理或颜色：电镀亮铬
适用门板厚度：1-5mm

Material:zinc alloy, copper.
Surface treatment or color:bright chrome plating.
Applicable door thickness:1-5mm.



MS401-1



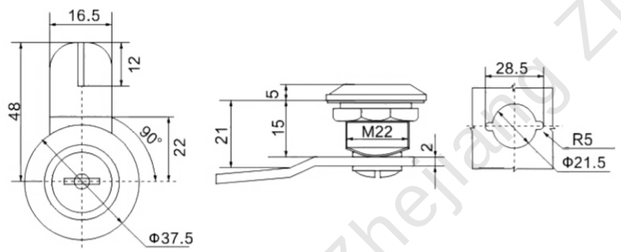

材质：锌合金
表面处理或颜色：电镀亮铬
适用门板厚度：1-5mm

Material:zinc alloy.
Surface treatment or color:bright chrome plating.
Applicable door thickness:1-5mm.

MS402-1

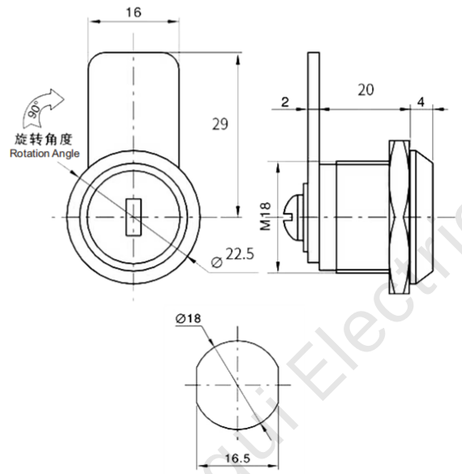

材质：锌合金
表面处理或颜色：喷塑黑、电泳黑、电镀亮铬
适用门板厚度：1-5mm

Material:zinc alloy.
Surface treatment or color:Spray black, electrophoretic black, bright chrome electroplating.
Applicable door thickness:1-5mm.



Zhejiang Zhegui Electric Co., Ltd.

MS403



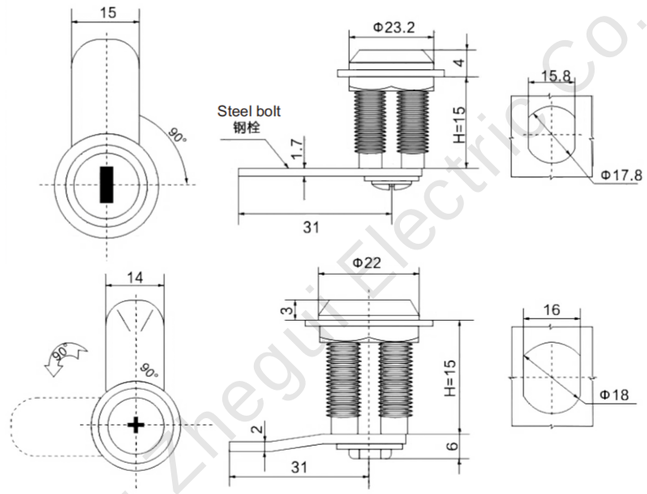

材质：锌合金
表面处理或颜色：电镀亮铬
适用门板厚度：1-5mm

Material:zinc alloy.
Surface treatment or color:bright chrome plating.
Applicable door thickness:1-5mm.

MS403-A



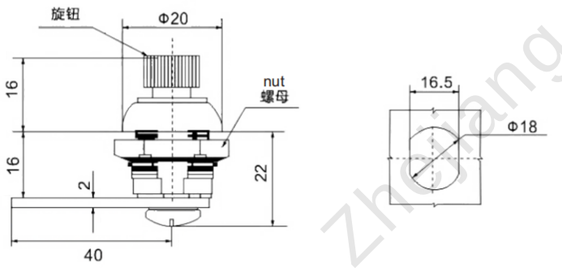

材质：锌合金
表面处理或颜色：电镀亮铬
适用门板厚度：1-5mm

Material:zinc alloy.
Surface treatment or color:bright chrome plating.
Applicable door thickness:1-5mm.

MS407



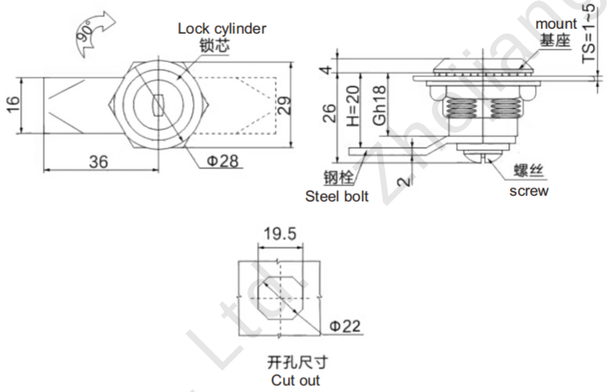

材质：锌合金
表面处理或颜色：电镀亮铬
适用门板厚度：1-3mm

Material:zinc alloy.
Surface treatment or color:bright chrome plating.
Applicable door thickness:1-3mm.

MS414



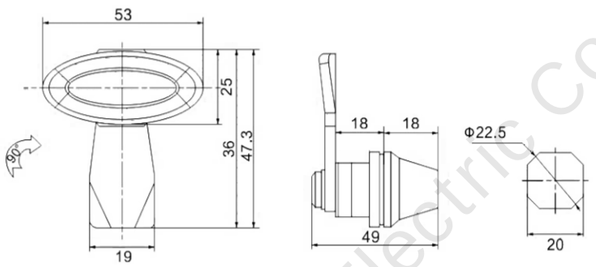

材质：锌合金
表面处理或颜色：黑色、灰色
适用门板厚度：1-8mm

Material:zinc alloy.
Surface treatment or color:black, grey.
Applicable door thickness:1-8mm.

Zhejiang Zhegui Electric Co., Ltd.

MS418



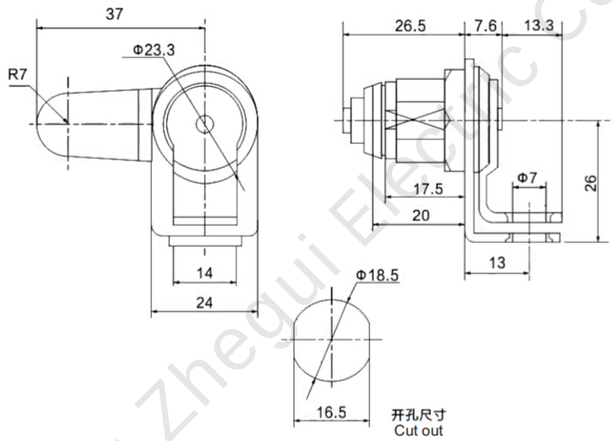

材质：锌合金
表面处理或颜色：电镀亮铬
适用门板厚度：1-5mm

Material:zinc alloy.
Surface treatment or color:bright chrome plating.
Applicable door thickness:1-5mm.

MS704-1

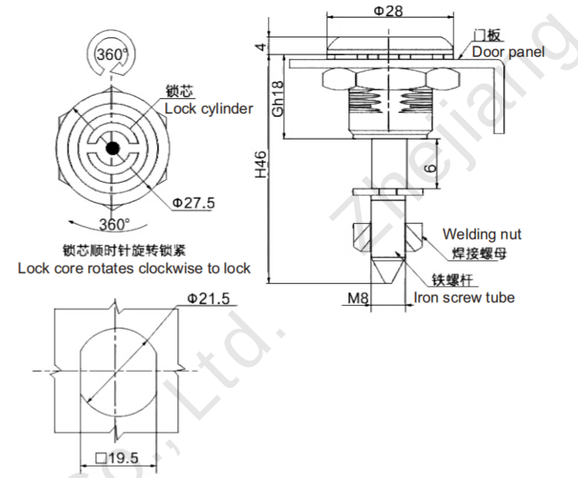

材质：锌合金
表面处理或颜色：电镀亮铬
适用门板厚度：1-8mm

Material:zinc alloy.
Surface treatment or color:bright chrome plating.
Applicable door thickness:1-8mm.



MS604



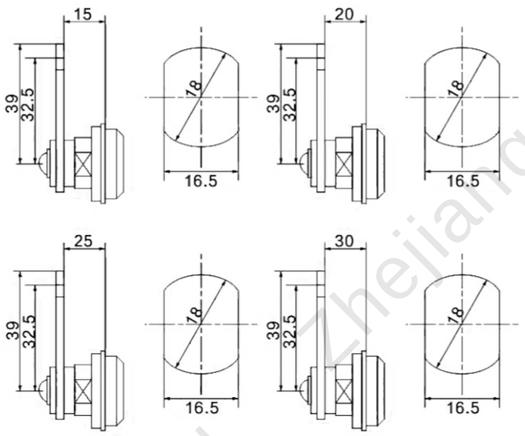

材质：锌合金
表面处理或颜色：电镀亮铬
适用门板厚度：1-5mm

Material:zinc alloy.
Surface treatment or color:bright chrome plating.
Applicable door thickness:1-5mm.

MS704-2

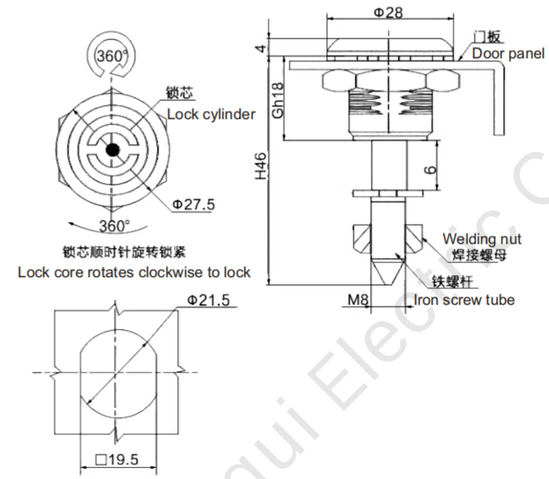

材质：锌合金
表面处理或颜色：电镀亮铬
适用门板厚度：1-8mm

Material:zinc alloy.
Surface treatment or color:bright chrome plating.
Applicable door thickness:1-8mm.



Zhejiang Zhegui Electric Co., Ltd.

MS705-2



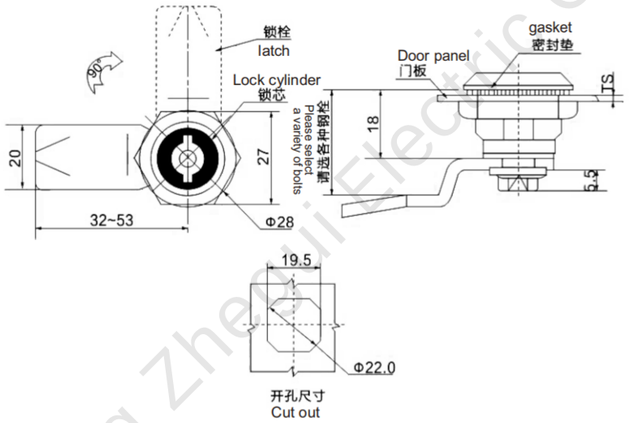

材质：锌合金
表面处理或颜色：喷塑黑
适用门板厚度：1-8mm

Material:zinc alloy.
Surface treatment or color:plastic spray black.
Applicable door thickness:1-8mm.

MS705-3A(圆形)



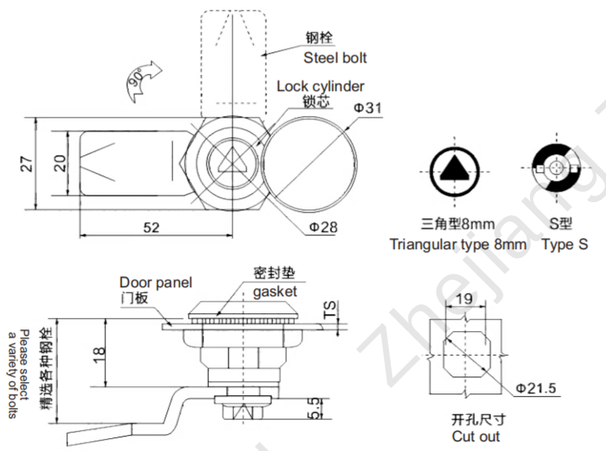

材质：锌合金
表面处理或颜色：电镀砂铬
适用门板厚度：1-5mm

Material:zinc alloy.
Surface treatment or color:chrome sand plating.
Applicable door thickness:1-5mm.

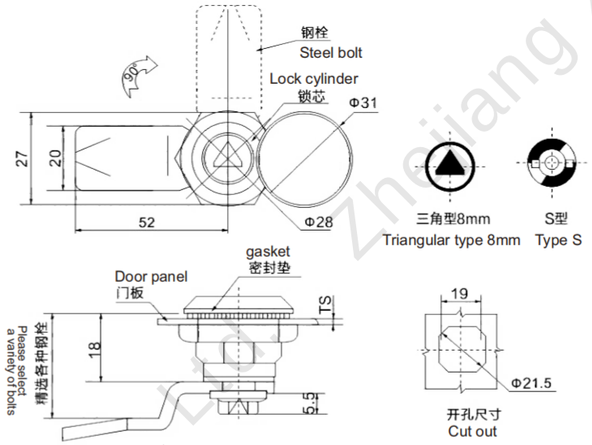

材质：锌合金
表面处理或颜色：电镀砂铬
适用门板厚度：1-5mm

Material:zinc alloy.
Surface treatment or color:chrome sand plating.
Applicable door thickness:1-5mm.

MS705-3B



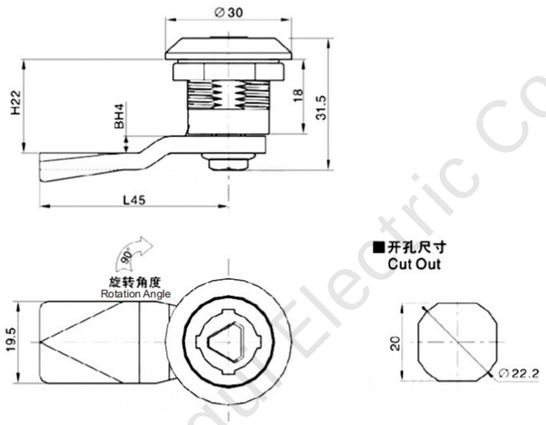

材质：锌合金
表面处理或颜色：电镀亮铬
适用门板厚度：1-5mm

Material:zinc alloy.
Surface treatment or color:bright chrome plating.
Applicable door thickness:1-5mm.

Zhejiang Zhegui Electric Co., Ltd.

MS705-3



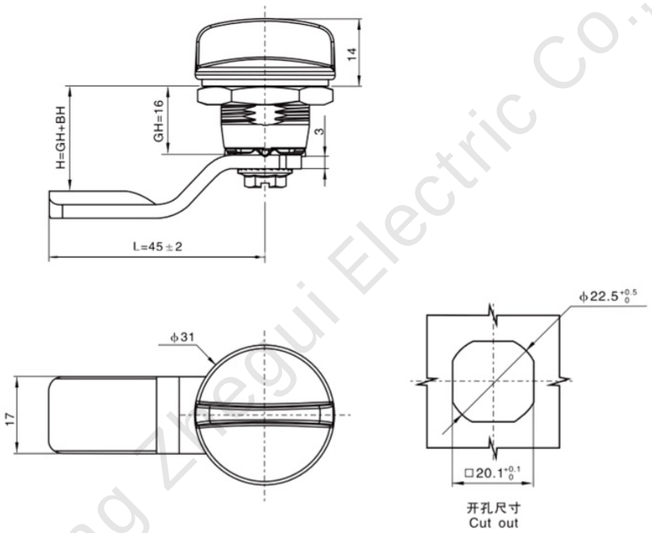

材质：锌合金
表面处理或颜色：喷塑黑
适用门板厚度：1-8mm

Material:zinc alloy.
Surface treatment or color:plastic spray black.
Applicable door thickness:1-8mm.

MS705(三角)

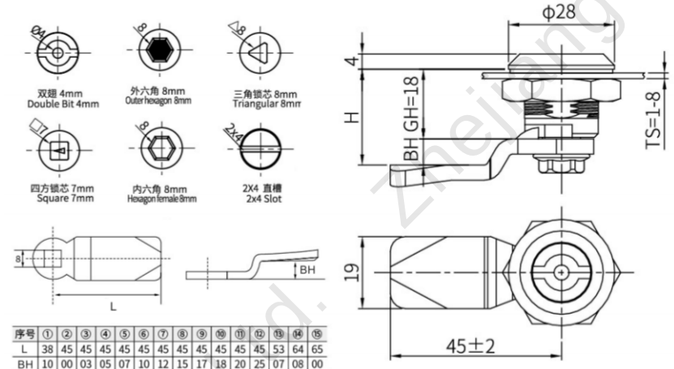

序号	①	②	③	④	⑤	⑥	⑦	⑧	⑨	⑩	⑪	⑫	⑬	⑭	⑮
L	38	45	45	45	45	45	45	45	45	45	45	45	53	64	65
BH	10	00	03	05	07	10	12	15	17	18	20	25	07	08	00
		√	√	√	√		√			√	√				
						√		√	√						

材质：锌合金、SUS304
表面处理或颜色：不锈钢拉丝、电镀亮铬
适用门板厚度：1-8mm

Material:zinc alloy, SUS304.
Surface treatment or color:Stainless steel wire drawing, plating bright chrome.
Applicable door thickness:1-8mm.

MS705(翼型)



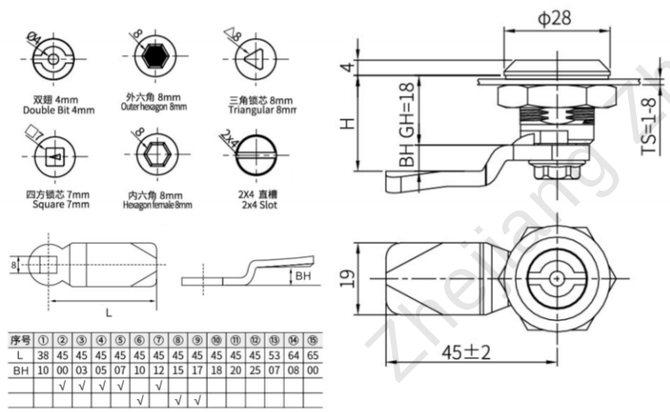

序号	①	②	③	④	⑤	⑥	⑦	⑧	⑨	⑩	⑪	⑫	⑬	⑭	⑮
L	38	45	45	45	45	45	45	45	45	45	45	45	53	64	65
BH	10	00	03	05	07	10	12	15	17	18	20	25	07	08	00
		√	√	√	√		√								
						√		√	√						

材质：锌合金、SUS304
表面处理或颜色：不锈钢拉丝、电镀亮铬
适用门板厚度：1-8mm

Material:zinc alloy, SUS304.
Surface treatment or color:Stainless steel wire drawing, plating bright chrome.
Applicable door thickness:1-8mm.

MS705(月牙孔)



Zhejiang Zhegui Electric Co., Ltd.

MS705(一字)



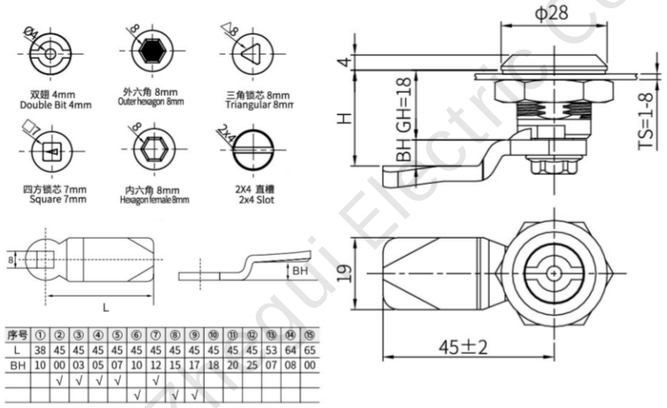

序号	①	②	③	④	⑤	⑥	⑦	⑧	⑨	⑩	⑪	⑫	⑬	⑭	⑮
L	38	45	45	45	45	45	45	45	45	45	45	45	53	64	65
BH	10	00	03	05	07	10	12	15	17	18	20	25	07	08	00
		√	√	√	√		√								
						√		√	√						

材质：锌合金、SUS304
表面处理或颜色：不锈钢拉丝、电镀亮铬
适用门板厚度：1-8mm

Material:zinc alloy, SUS304.
Surface treatment or color:Stainless steel wire drawing, plating bright chrome.
Applicable door thickness:1-8mm.

MS705(内六角)

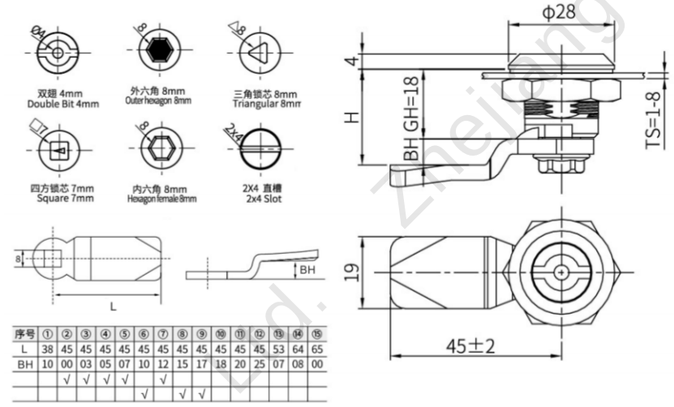

序号	①	②	③	④	⑤	⑥	⑦	⑧	⑨	⑩	⑪	⑫	⑬	⑭	⑮
L	38	45	45	45	45	45	45	45	45	45	45	45	53	64	65
BH	10	00	03	05	07	10	12	15	17	18	20	25	07	08	00
		√	√	√	√		√								
						√		√	√						

材质：锌合金、SUS304
表面处理或颜色：不锈钢拉丝、电镀亮铬
适用门板厚度：1-8mm

Material:zinc alloy, SUS304.
Surface treatment or color:Stainless steel wire drawing, plating bright chrome.
Applicable door thickness:1-8mm.



MS705(内四角)



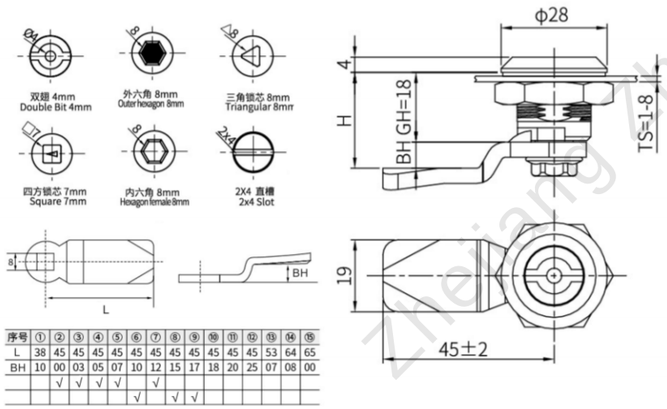

序号	①	②	③	④	⑤	⑥	⑦	⑧	⑨	⑩	⑪	⑫	⑬	⑭	⑮
L	38	45	45	45	45	45	45	45	45	45	45	45	53	64	65
BH	10	00	03	05	07	10	12	15	17	18	20	25	07	08	00
		√	√	√	√		√								
						√		√	√						

材质：锌合金、SUS304
表面处理或颜色：不锈钢拉丝、电镀亮铬
适用门板厚度：1-8mm

Material:zinc alloy, SUS304.
Surface treatment or color:Stainless steel wire drawing, plating bright chrome.
Applicable door thickness:1-8mm.

MS705-40

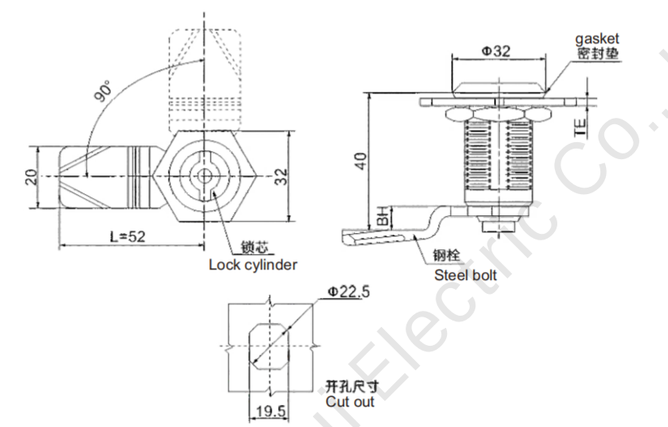

材质：锌合金
表面处理或颜色：电镀亮铬
功能说明：旋转90°，实现开启或锁闭

Material:zinc alloy.
Surface treatment or color:plating bright chrome.
Function description:rotate 90° to open or lock.



Zhejiang Zhegui Electric Co., Ltd.

MS705-62



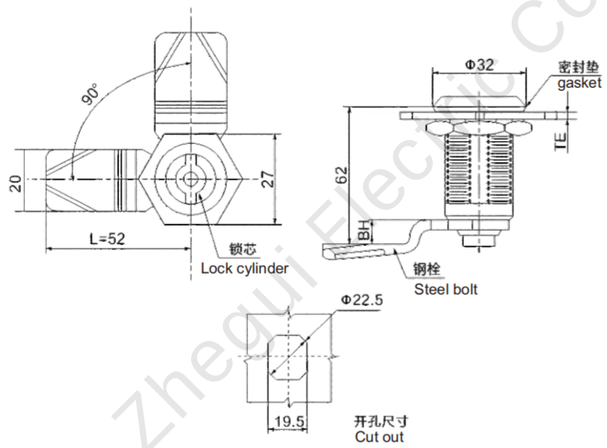

材质：锌合金
表面处理或颜色：电镀亮铬
功能说明：旋转90°，实现开启或锁闭

Material:zinc alloy.
Surface treatment or color:plating bright chrome.
Function description:rotate 90° to open or lock.

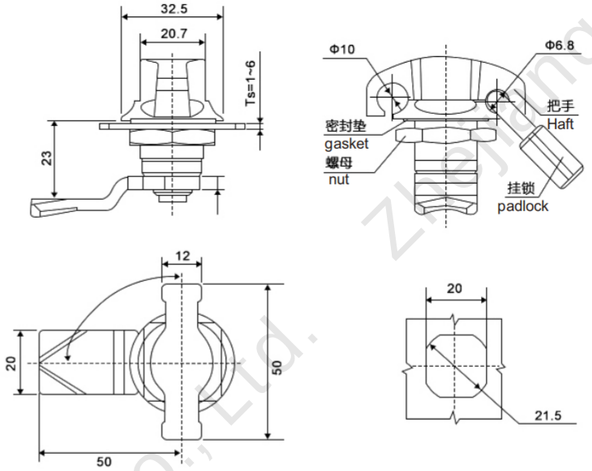

材质：锌合金
表面处理或颜色：亚麻黑
适用门板厚度：1-6mm

Material:zinc alloy.
Surface treatment or color:flax black.
Applicable door thickness:1-6mm.

MS714-3



MS714-2



材质：锌合金、PA尼龙
表面处理或颜色：黑色
适用门板厚度：1-6mm

Material:zinc alloy, PA nylon.
Surface treatment or color:black.
Applicable door thickness:1-6mm.

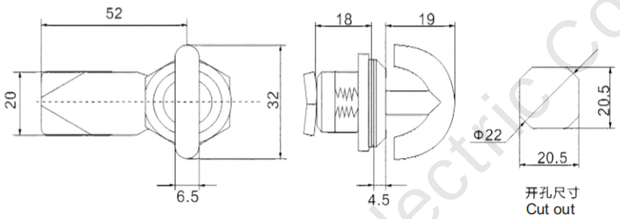

材质：锌合金
表面处理或颜色：电镀亮铬
适用门板厚度：1-8mm

Material:zinc alloy.
Surface treatment or color:bright chrome plating.
Applicable door thickness:1-8mm.

MS715



Zhejiang Zhegui Electric Co., Ltd.

MS748

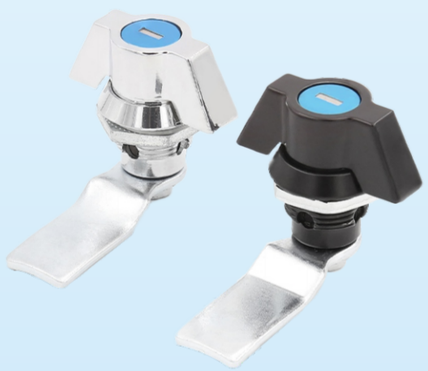

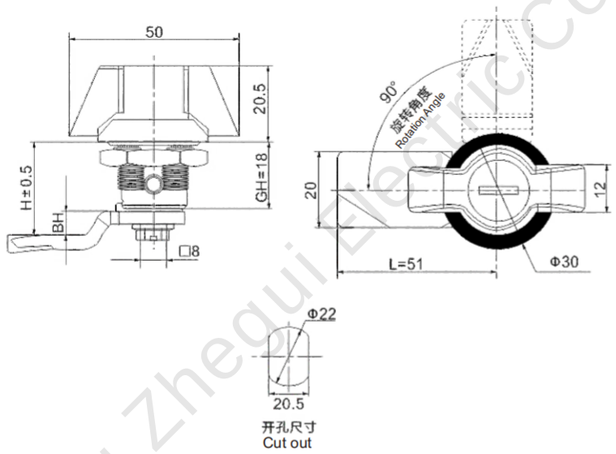

材质：锌合金
表面处理或颜色：喷塑黑、电镀亮铬
适用门板厚度：1-5mm

Material:zinc alloy.
Surface treatment or color:spray black, plating bright chrome.
Applicable door thickness:1-5mm.

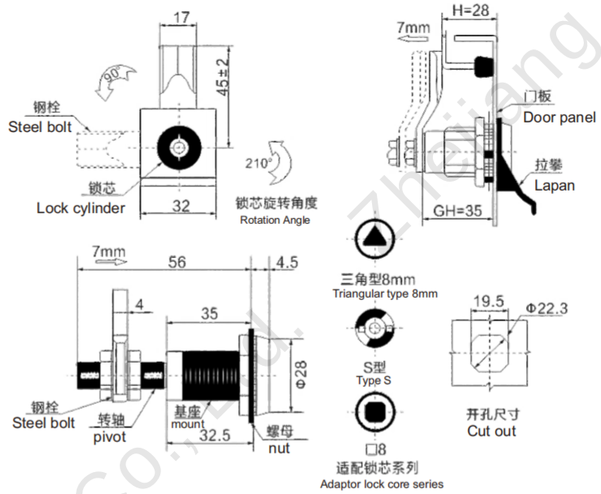

材质：锌合金
表面处理或颜色：喷塑黑、电镀亮铬
适用门板厚度：1-8mm

Material:zinc alloy.
Surface treatment or color:spray black, plating bright chrome.
Applicable door thickness:1-8mm.

MS816



MS813



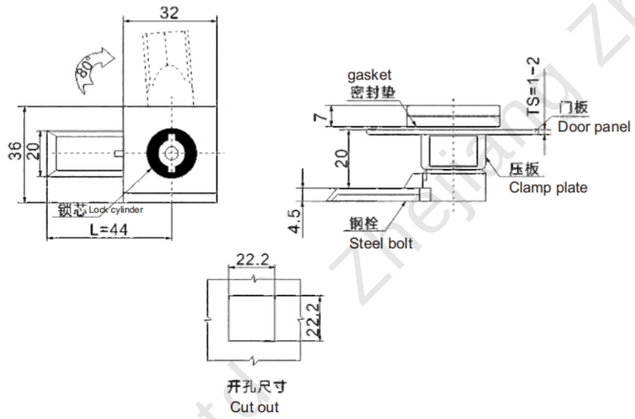

材质：锌合金
表面处理或颜色：喷塑米黄色、电镀亮铬
适用门板厚度：1-5mm

Material:zinc alloy.
Surface treatment or color:spray beige, electroplating bright chrome.
Applicable door thickness:1-5mm.

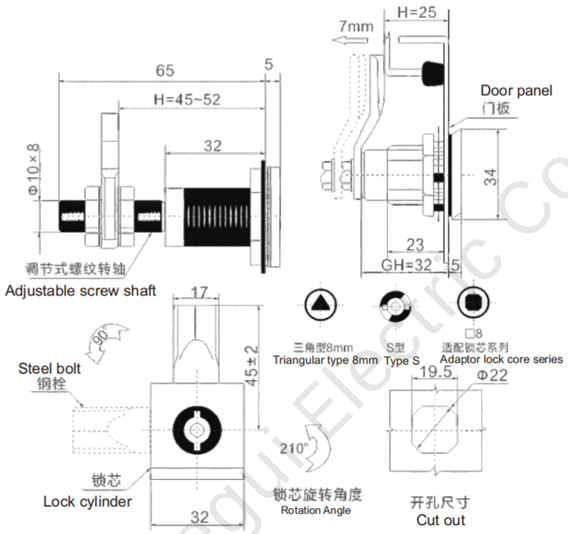

材质：锌合金
表面处理或颜色：喷塑黑、电镀亮铬
适用门板厚度：1-8mm

Material:zinc alloy.
Surface treatment or color:spray black, plating bright chrome.
Applicable door thickness:1-8mm.

MS817

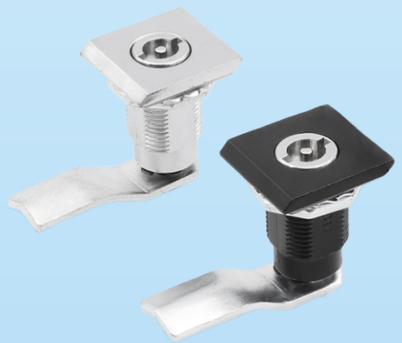

Zhejiang Zhegui Electric Co., Ltd.

MS6018



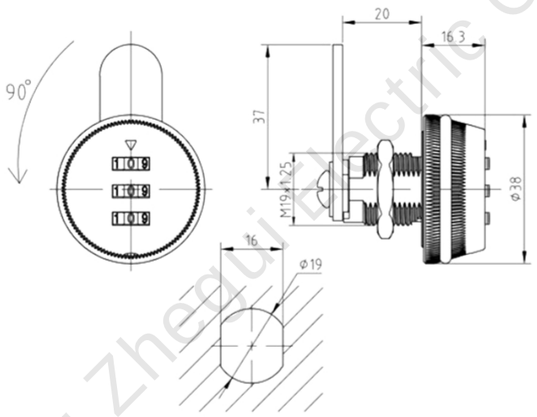

材质：锌合金
表面处理或颜色：电镀亮铬
功能说明：旋转90°，实现开启或锁闭

Material:zinc alloy.
Surface treatment or color:bright chrome plating.
Function description:rotate 90° to open or lock.

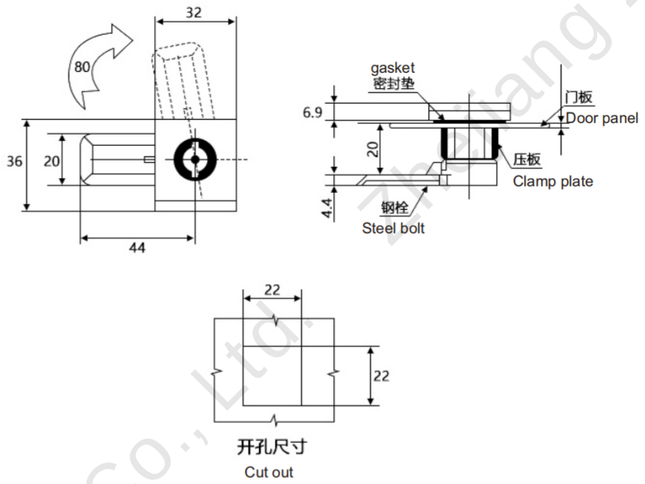

材质：锌合金、ABS塑料
表面处理或颜色：黑色
适用门板厚度：1-3mm

Material:zinc alloy, ABS plastic.
Surface treatment or color:black.
Applicable door thickness:1-3mm.

老型基业锁



高压柜锁



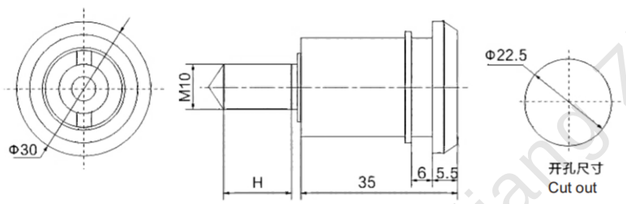

各种尺寸非标可以定做 Various sizes non-standard can be customized	
物料号 Material number	H
MS 707-19	H-19
MS 707-24	H-24
MS 707-29	H-29

材质：锌合金、ABS塑料
表面处理或颜色：黑色、电镀亮铬
适用门板厚度：1-6mm

Material:zinc alloy, ABS plastic.
Surface treatment or color:black, bright chrome plating.
Applicable door thickness:1-6mm.

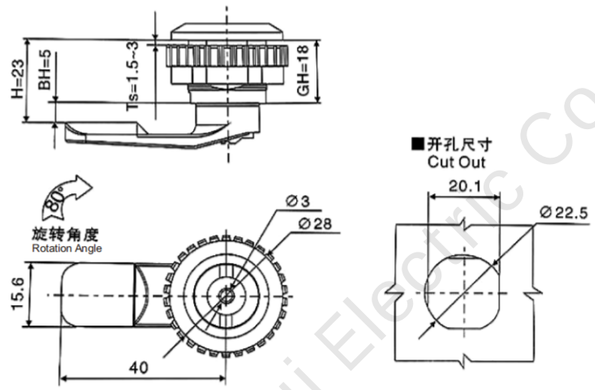

材质：ABS塑料
表面处理或颜色：黑色
适用门板厚度：1.5-2mm

Material:ABS plastic.
Surface treatment or color:black.
Applicable door thickness:1.5-2mm.

新型基业锁



Zhejiang Zhegui Electric Co., Ltd.

AB103



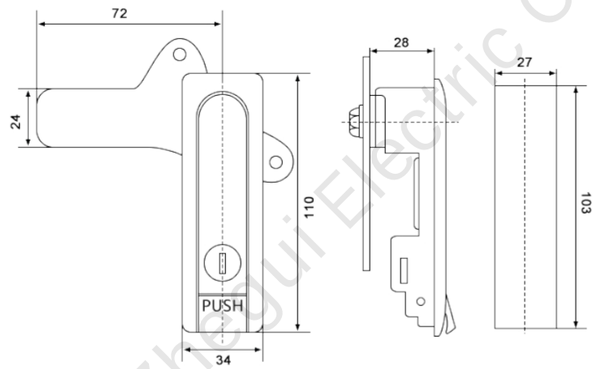

材质：锌合金
表面处理或颜色：纳米喷漆、镀铬、电泳黑
功能说明：外形美观、超薄形平面,UP手提式

Material:zinc alloy.
Surface treatment or color: nano paint, chrome plating, electrophoretic black.
Function description: beautiful appearance, ultra-thin plane. UP portable.

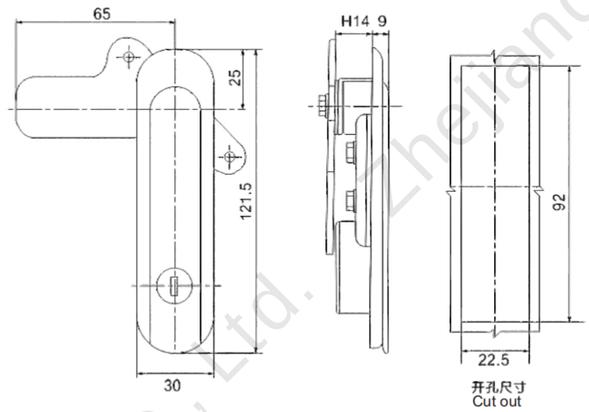

材质：锌合金
表面处理或颜色：纳米喷漆、镀铬、电泳黑
适用门板厚度：1-4mm

Material:zinc alloy.
Surface treatment or color:nano paint, chrome plating, electrophoretic black.
Applicable door thickness:1-4mm.

老AB402



老AB402-1



老AB402-2

新AB401



新AB401



新AB402



新AB403

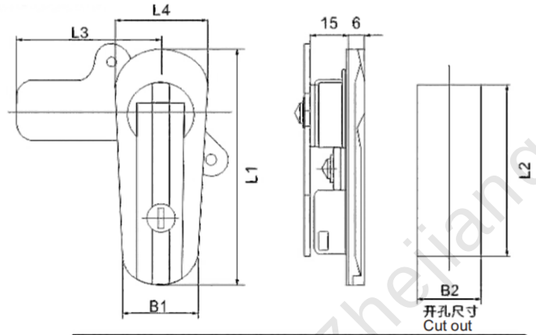

型号 \ 尺寸	L1	L2	L3	L4	B1	B2
新型AB401	151	116.5	72	36.5	30	26.5
新型AB402	122	95	65	36.5	28	23.5
新型AB403	90	62.5	65	32	28	23

材质：锌合金
表面处理或颜色：纳米喷漆、镀铬、电泳黑
适用门板厚度：1-4mm

Material:zinc alloy.
Surface treatment or color:nano paint, chrome plating, electrophoretic black.
Applicable door thickness:1-4mm.

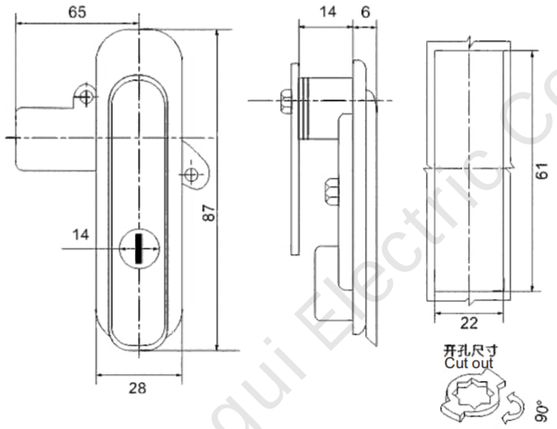

材质：锌合金
表面处理或颜色：亚光、亚黑
适用门板厚度：1-4mm

Material:zinc alloy.
Surface treatment or color:matte, sub-black.
Applicable door thickness:1-4mm.

老AB403



老AB403-1



老AB403-2

Zhejiang Zhegui Electric Co., Ltd.

AB301



AB301



AB301-1



AB301-1-1



AB302-1



AB303-1

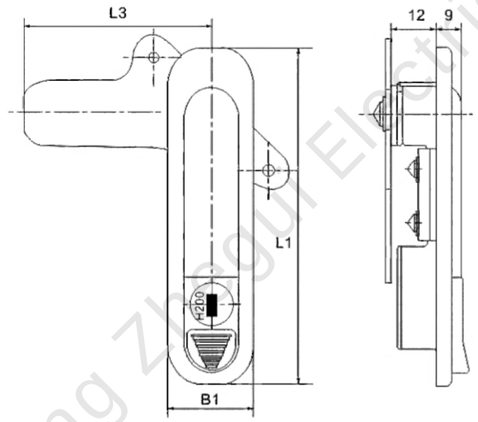

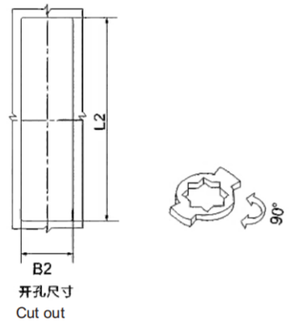

型号 \ 尺寸	L1	L2	L3	B1	B2
AB301	144	116	70	32	25.5
AB302	119	94.5	65	30	23.5
AB302-1-1	119	94.5	65	30	23
AB302-2-1	124	100.5	65	30	21.5
AB303	88	62	65	28	23

材质：锌合金
表面处理或颜色：电镀亮铬、亚光
适用门板厚度：1-4mm

Material:zinc alloy.
Surface treatment or color:plating bright chrome, matt.
Applicable door thickness:1-4mm.

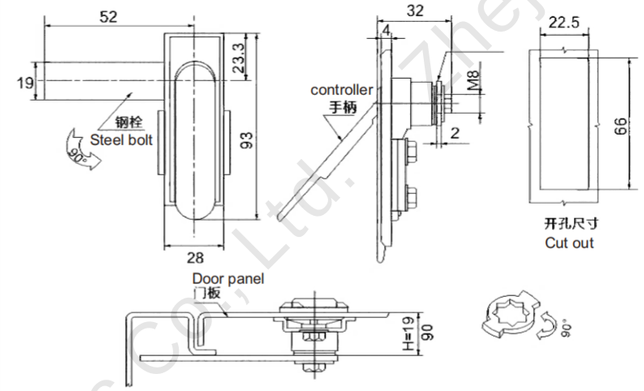

MS308-1、-2

MS308-3

材质：锌合金
表面处理或颜色：喷塑(黑)、亚光、亮白
注：改变定位及钢栓的放置角度，实现左右开门.

Material:zinc alloy.
Surface treatment or color:spray (black), matte, bright white
Note: Change the positioning and steel bolt placement Angle to achieve left and right door opening.

MS380

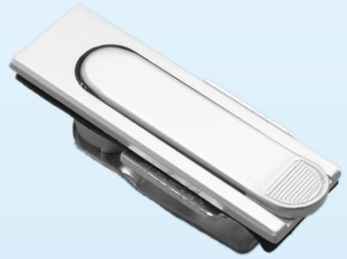

MS308-1(亚光)



MS308-1(亮白)



MS308-2(亚黑)



MS308-3

Zhejiang Zhegui Electric Co., Ltd.

MS503

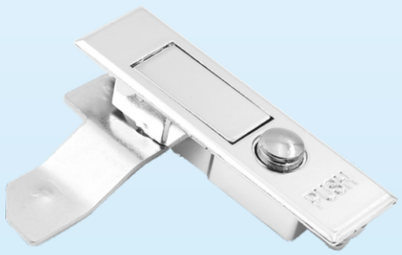

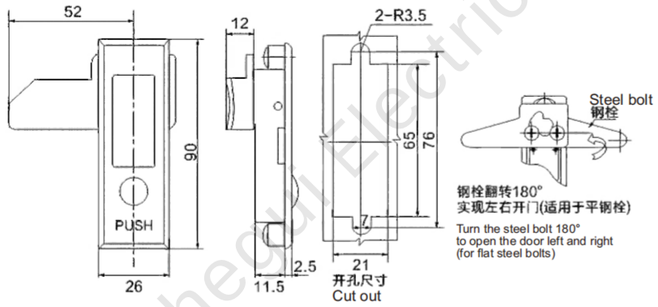

材质：锌合金
表面处理或颜色：镀铬、亮光、纳米喷塑、亚黑
适用门板厚度：1-4mm

Material:zinc alloy.
Surface treatment or color: chrome plating, bright light, nano spray, sub-black.
Applicable door thickness:1-4mm.

AB509

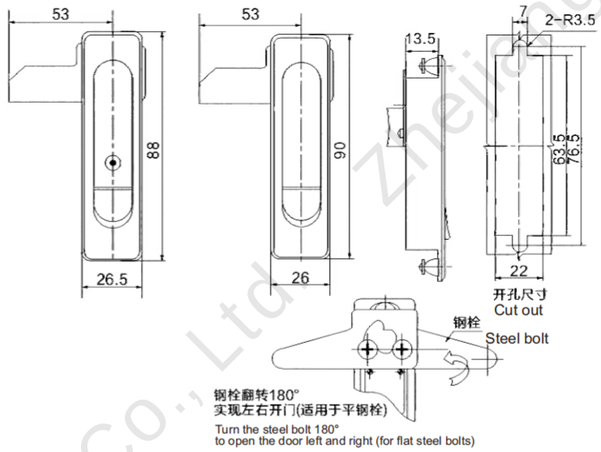

材质：锌合金
表面处理或颜色：电镀亮铬、亚光
适用门板厚度：1-4mm

Material:zinc alloy.
Surface treatment or color:plating bright chrome, matt.
Applicable door thickness:1-4mm.



AB509-1(亚光)　AB509-1(亮铬)



AB509-2(亚光)　AB509-2(亮铬)

MS505



AB505-1(右)



AB505-2(左)

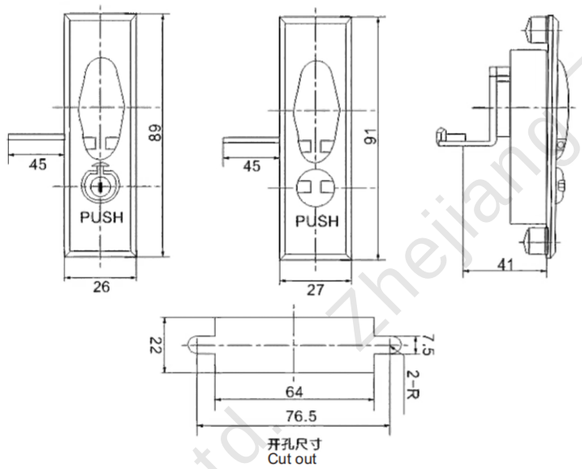

材质：锌合金
表面处理或颜色：镀铬
适用门板厚度：1-4mm

Material:zinc alloy.
Surface treatment or color:chrome plating.
Applicable door thickness:1-4mm.

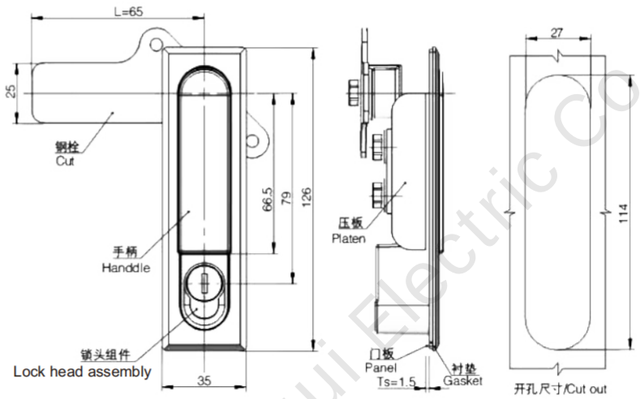

材质：锌合金
表面处理或颜色：亚光、喷塑黑
适用门板厚度：1-3mm

Material:zinc alloy.
Surface treatment or color:matt, spray black.
Applicable door thickness:1-3mm.

MS618



MS618-1



MS618-2

Zhejiang Zhegui Electric Co., Ltd.

MS603



MS603-1(W)



MS603-2(W)



MS603-1®



MS603-2®

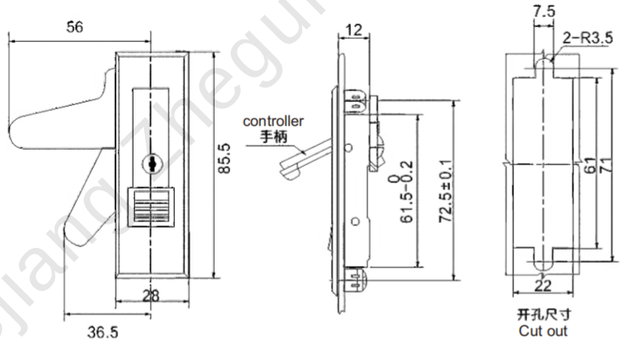

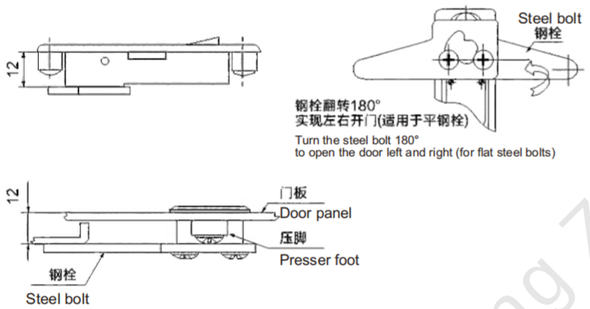

材质：锌合金
表面处理或颜色：喷沙、亮铬、亮镍
适用门板厚度：1-4mm

Material:zinc alloy.
Surface treatment or color:sand blasting, bright chrome, bright nickel.
Applicable door thickness:1-4mm.

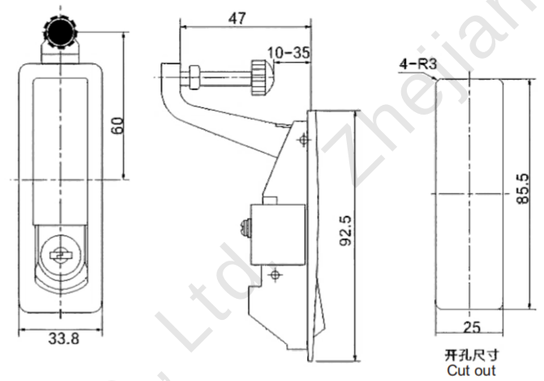

材质：锌合金
表面处理或颜色：喷塑黑、电镀亮铬
适用门板厚度：1-5mm

Material:zinc alloy.
Surface treatment or color:spray black, plating bright chrome.
Applicable door thickness:1-5mm.

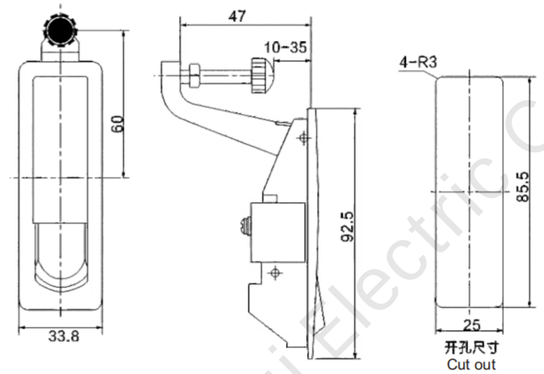

材质：锌合金
表面处理或颜色：喷塑黑、电镀亮铬
适用门板厚度：1-5mm

Material:zinc alloy.
Surface treatment or color:spray black, plating bright chrome.
Applicable door thickness:1-5mm.

MS606



MS606-1(白)



MS606-1(黑)



MS606-2(白)



MS606-2(黑)

Zhejiang Zhegui Electric Co., Ltd.

MS609



MS609-1



MS609-2

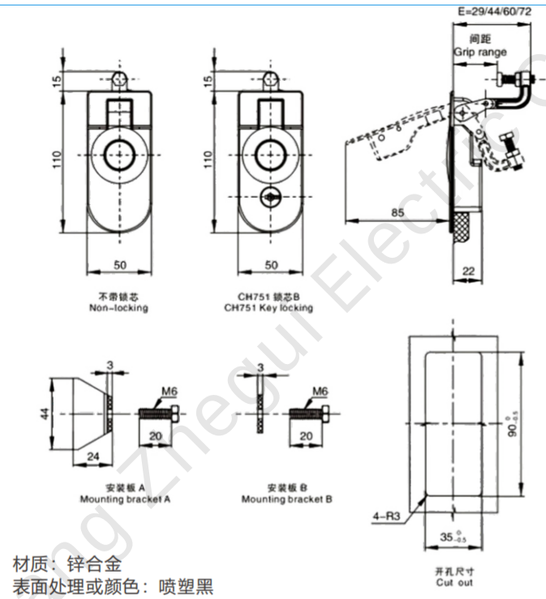

材质：锌合金
表面处理或颜色：喷塑黑
适用门板厚度：1-4mm

Material:zinc alloy.
Surface treatment or color: plastic spray black.
Applicable door thickness:1-4mm.

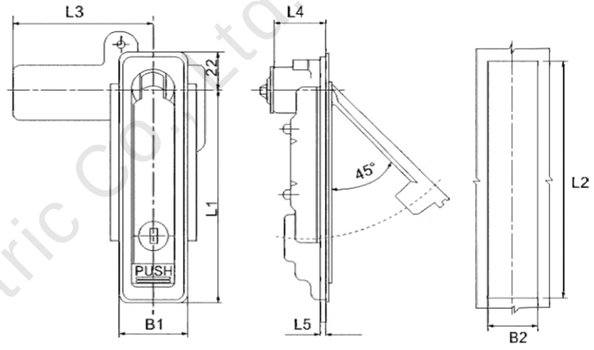

MS712



MS712-1



MS712-1-1

MS708

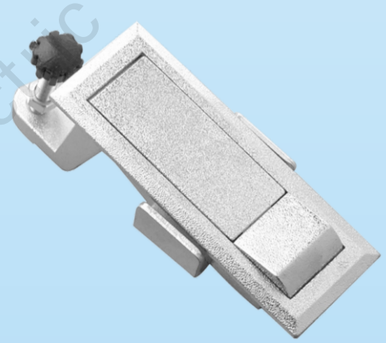

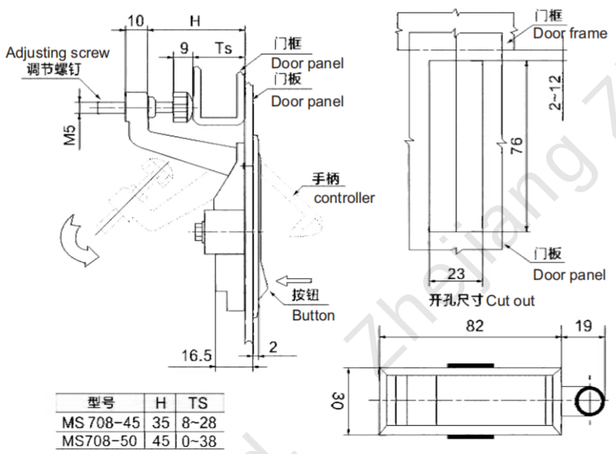

型号	H	TS
MS 708-45	35	8~28
MS708-50	45	0~38

材质：锌合金
表面处理或颜色：喷沙、亮铬、亮镍、沙黑
功能说明：按钮弹出式平面锁，适用小型开关柜，可配置各种锁栓，平面按钮，可调节止口高度。

Material:zinc alloy.
Surface treatment or color:chrome plating.
Function description: button pop-up flat lock, suitable for small switch cabinet, can be configured with a variety of lock bolts,Flat button to adjust the edge height.

型号 \ 尺寸	L1	L2	L3	L4	L5	B1	B2
MS712	147	137.5	88	30	1~3	36	27.5
MS713	109	102.5	62	30	1~3	33.5	26.5
MS712-1-1	147	137.5	88	30	1~3	36	27.5
MS713-1-1	109	102.5	62	30	1~3	33.5	26.5
MS712-2G-1	147	137.5	88	30	1~3	36	27.5
MS713-2G-1	109	102.5	62	30	1~3	33.5	26.5

材质：锌合金
表面处理或颜色：纳米喷漆、镀铬、电泳黑
适用门板厚度：1-5mm

Material:zinc alloy.
Surface treatment or color:nano paint, chrome plating, electrophoretic black.
Applicable door thickness:1-5mm.

MS713



MS713-1



MS713-1-1

Zhejiang Zhegui Electric Co., Ltd.

MS717-1



MS717-1(黑色)

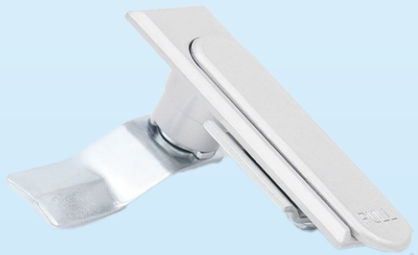

MS717-1(白色)

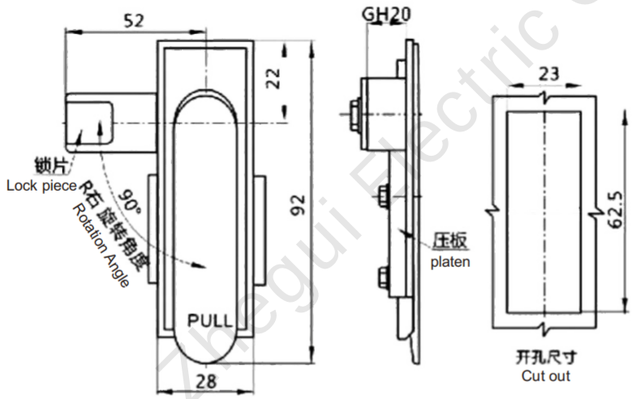

材质：锌合金
表面处理或颜色：喷塑（黑）、亚光、亮白
适用门板厚度：1-4mm

Material:zinc alloy.
Surface treatment or color: spray (black), matte, bright white.
Applicable door thickness:1-3mm.

MS730

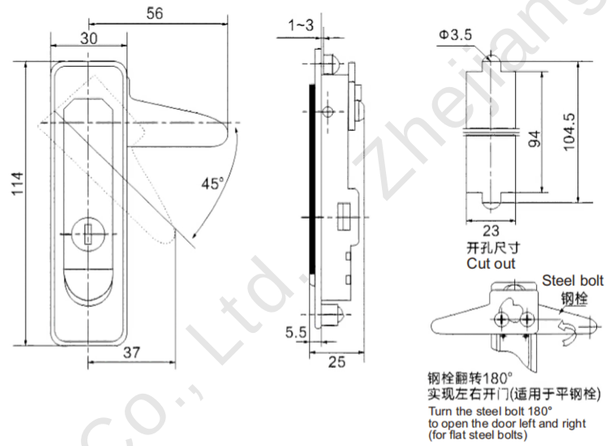

材质：锌合金
表面处理或颜色：纳米喷漆、镀铬、电泳黑
功能说明：按下按钮弹出把手旋转，实现开启或锁闭。

Material:zinc alloy.
Surface treatment or color:nano paint, chrome plating, electrophoretic black.
Function description:press the button to turn the handle to open or lock.



MS730-1

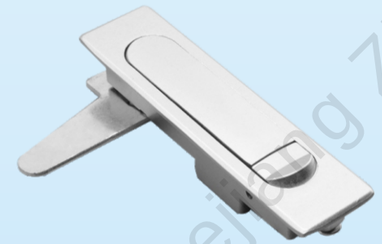

MS730-2

MS717-2



MS717-2(黑色)

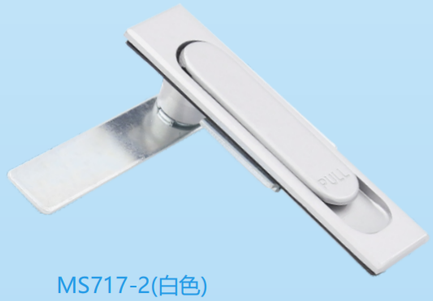

MS717-2(白色)

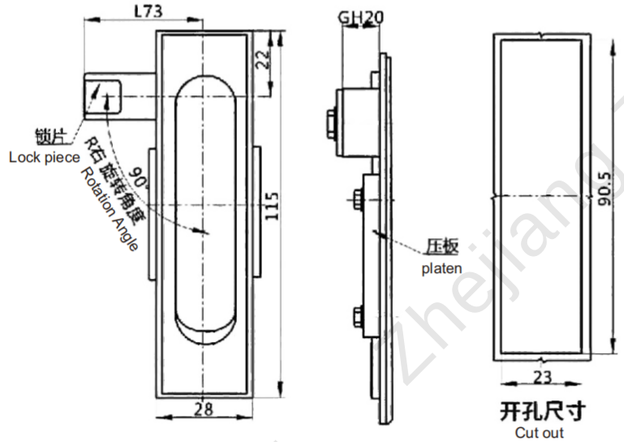

材质：锌合金
表面处理或颜色：喷塑（黑）、亚光、亮白
适用门板厚度：1-4mm

Material:zinc alloy.
Surface treatment or color:spray (black), matte, bright white.
Applicable door thickness:1-3mm.

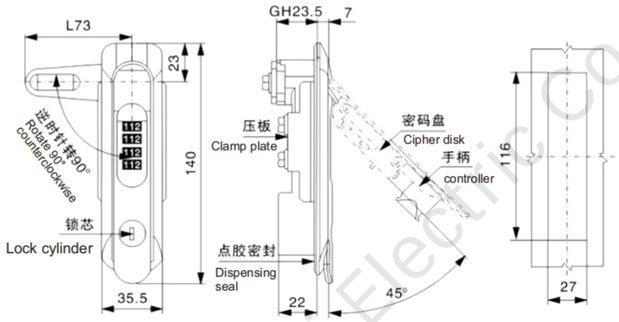

材质：锌合金
表面处理或颜色：亚光、喷塑黑
适用门板厚度：1-4mm

Material:zinc alloy.
Surface treatment or color:matt, spray black.
Applicable door thickness:1-4mm.

MS819



MS819(黑色)



MS819(白色)

Zhejiang Zhegui Electric Co., Ltd.

MS818



MS818(黑色)



MS818(白色)



MS818十字(黑色)



MS818十字(白色)

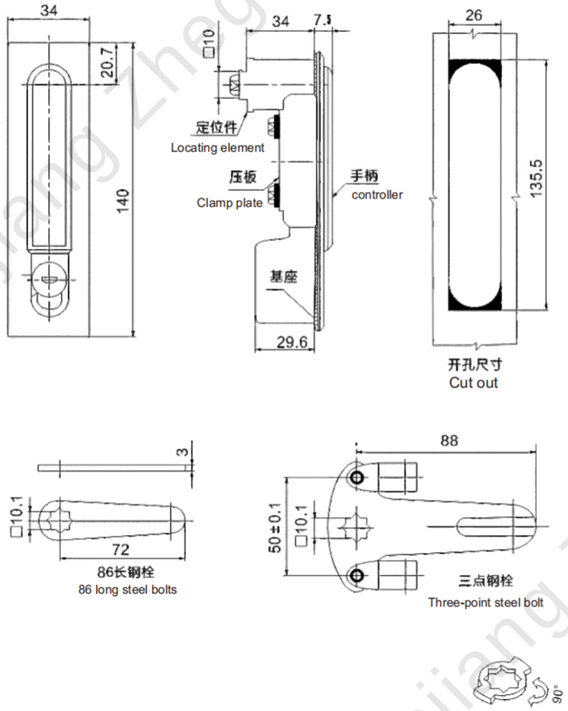

材质：锌合金
表面处理或颜色：亚光、亚黑
注：改变定位件及铜栓的放置角度，实现左右开门

Material:zinc alloy.
Surface treatment or color:matte, sub-black.
Note: Change the positioning parts and copper bolt placement
Angle to achieve left and right door opening.

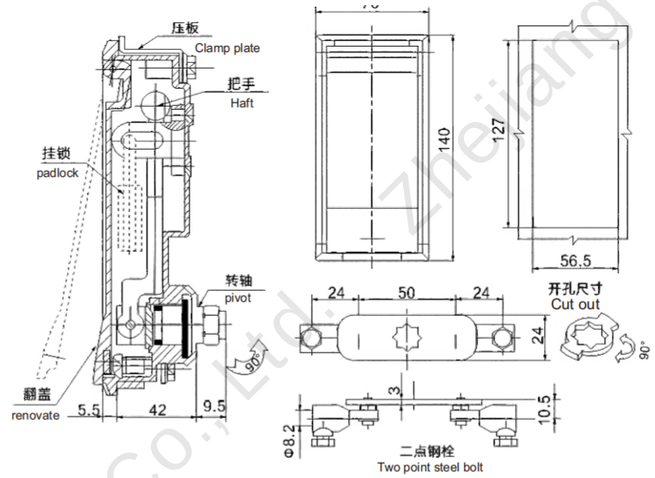

材质：锌合金
表面处理或颜色：纳米喷塑、黑色
功能说明:提起盖子,旋转把手,实现开启或锁闭。

Material:zinc alloy.
Surface treatment or color:nano spray, black.
Function description: Lift the lid, rotate the handle to open or lock.

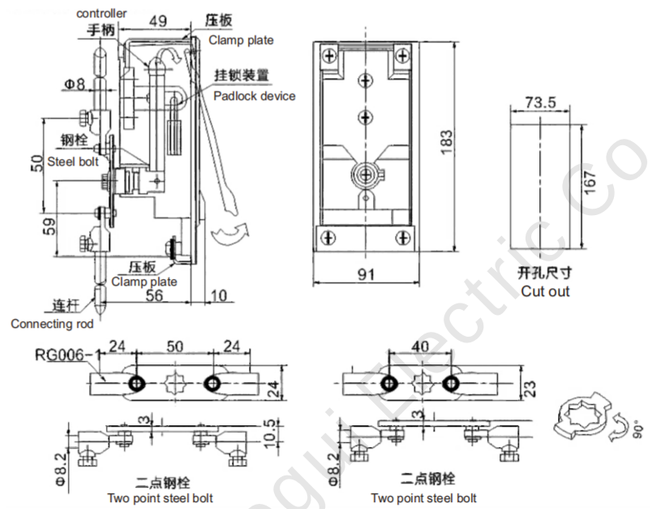

材质：锌合金
表面处理或颜色：纳米喷塑、黑色
功能说明：按下按钮弹出把手旋转，实现开启或锁闭。

Material:zinc alloy.
Surface treatment or colornano spray, black.
Function description: Lift the lid, rotate the handle to open or lock.

MS887

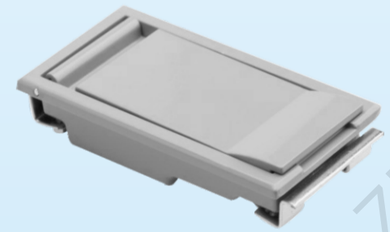

MS888

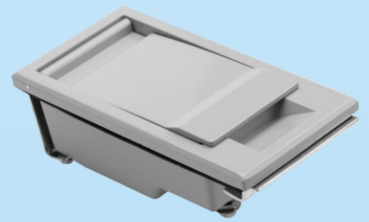

Zhejiang Zhegui Electric Co., Ltd.

A17



A17-1



A17-2

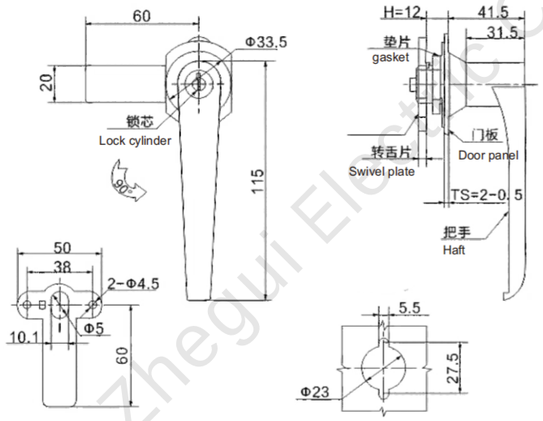

材质：锌合金、铝合金
表面处理或颜色：亮铬、亮光色
功能说明：旋转把手90°，实现开启或锁闭

Material:zinc alloy, aluminum alloy.
Surface treatment or color:bright chrome, glossy color.
Function description:turn the handle 90° to open or lock.

A19



A19-1



A19-2

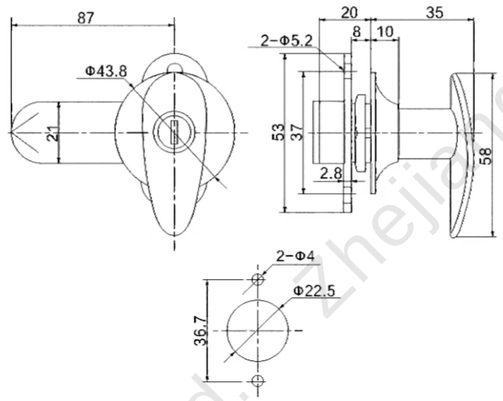

材质：锌合金、铝合金
表面处理或颜色：亮铬、亮光色
适用门板厚度：1-1.5mm

Material:zinc alloy, aluminum alloy.
Surface treatment or color:bright chrome, glossy color.
Applicable door thickness:1-1.5mm.

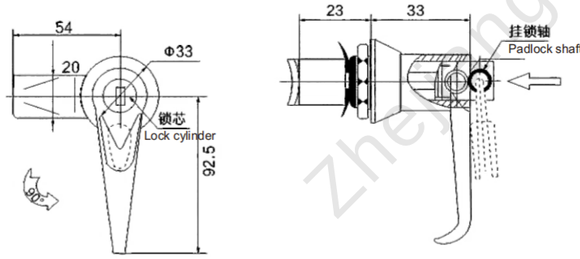

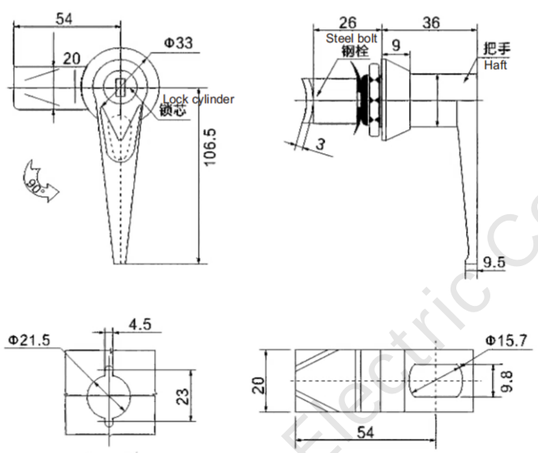

材质：锌合金、铝合金
表面处理或颜色：亮铬、拉丝铬
适用门板厚度：1-3mm

Material:zinc alloy, aluminum alloy.
Surface treatment or color:bright chrome, brushed chrome.
Applicable door thickness:1-3mm.

MS301



MS301-1

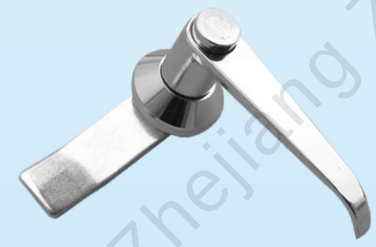

MS301-A



新MS301-1

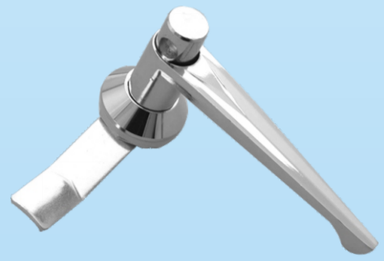

新MS301-A-1

Zhejiang Zhegui Electric Co., Ltd.

MS302



MS302-1



MS302-A

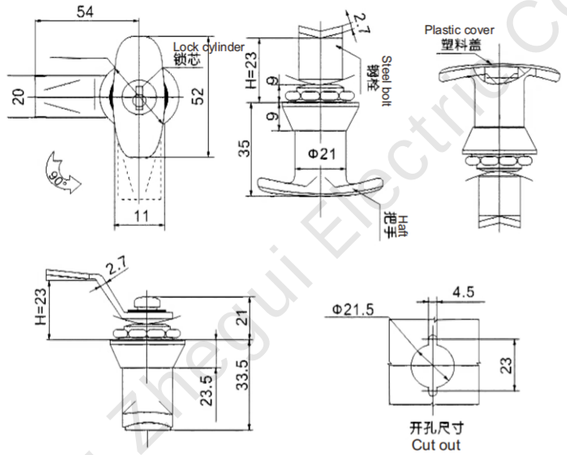

材质：锌合金、铝合金
表面处理或颜色：亮铬、拉丝铬
适用门板厚度：1-3mm

Material:zinc alloy, aluminum alloy.
Surface treatment or color:bright chrome, brushed chrome.
Applicable door thickness:1-3mm.

MS305



MS305-1



MS305-A

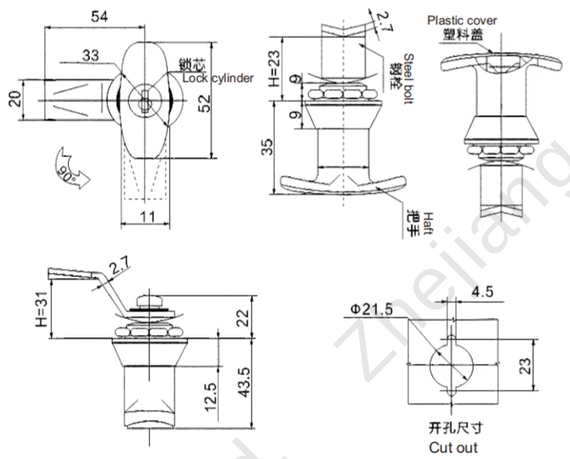

材质：锌合金、铝合金
表面处理或颜色：亮铬、拉丝铬
适用门板厚度：1-3mm

Material:zinc alloy, aluminum alloy.
Surface treatment or color:bright chrome, brushed chrome.
Applicable door thickness:1-3mm.

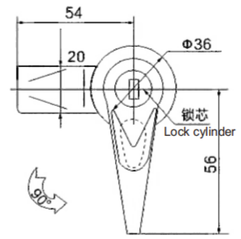

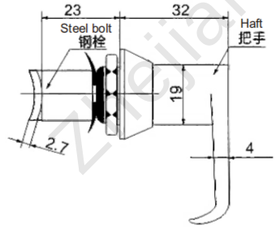

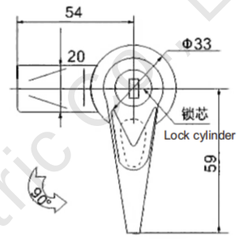

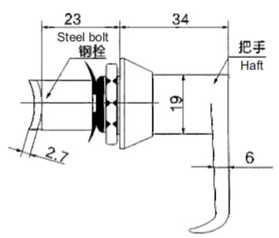

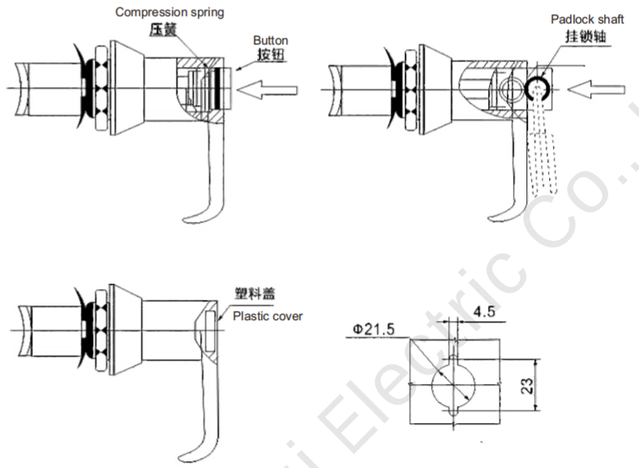

材质：锌合金、铝合金
表面处理或颜色：亮铬、拉丝铬
适用门板厚度：1-3mm

Material:zinc alloy, aluminum alloy.
Surface treatment or color:bright chrome, brushed chrome.
Applicable door thickness:1-3mm.

MS303



MS303-1

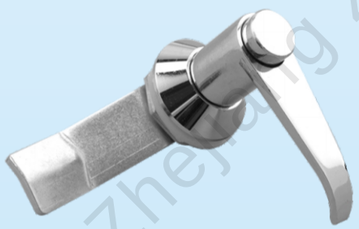

MS303-A



新MS303-1

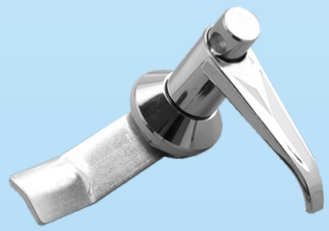

新MS303-A-1

Zhejiang Zhegui Electric Co., Ltd.

MS304



MS304-1



MS304-A

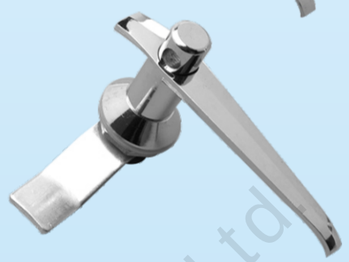

MS304-A-1



新型MS304-1



新型MS304-A

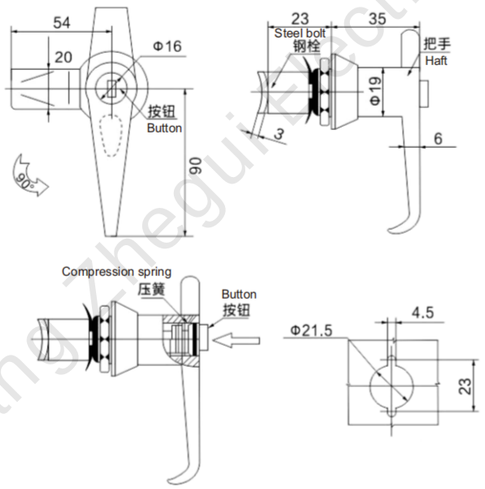

材质：锌合金、铝合金
表面处理或颜色：亮铬、拉丝铬
适用门板厚度：1-3mm

Material:zinc alloy, aluminum alloy.
Surface treatment or color:bright chrome, brushed chrome.
Applicable door thickness:1-3mm.

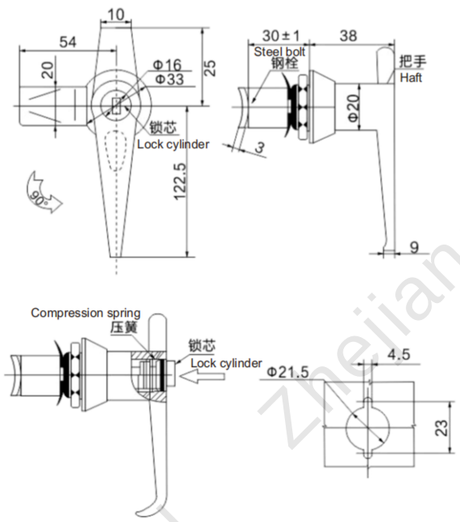

材质：锌合金、铝合金
表面处理或颜色：亮铬、亮白色
适用门板厚度：1-10mm

Material:zinc alloy, aluminum alloy.
Surface treatment or color:bright chrome, bright white.
Applicable door thickness:1-10mm.

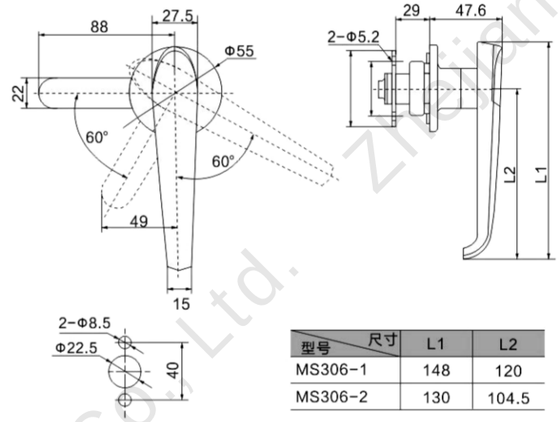

型号 \ 尺寸	L1	L2
MS306-1	148	120
MS306-2	130	104.5

材质：锌合金、铝合金
表面处理或颜色：亮铬、亮白色
适用门板厚度：1-10mm

Material:zinc alloy, aluminum alloy.
Surface treatment or color:bright chrome, bright white.
Applicable door thickness:1-10mm.

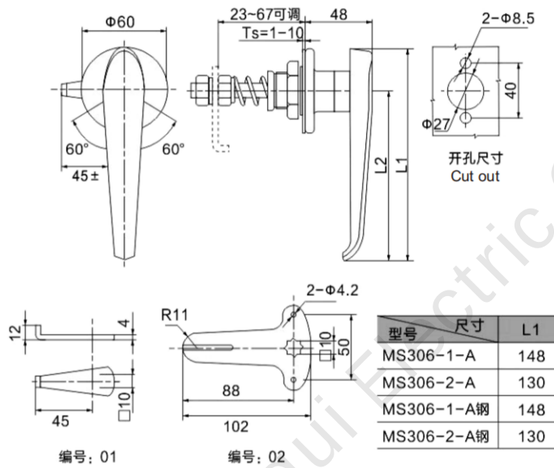

型号 \ 尺寸	L1	L2
MS306-1-A	148	120
MS306-2-A	130	104.5
MS306-1-A钢	148	120
MS306-2-A钢	130	104.5

材质：锌合金、铝合金
表面处理或颜色：亮铬、亮白色
适用门板厚度：1-10mm

Material:zinc alloy, aluminum alloy.
Surface treatment or color:bright chrome, bright white.
Applicable door thickness:1-10mm.

MS306



MS306-1



MS306-2



MS306-1-A



MS306-1-A（钢）

Zhejiang Zhegui Electric Co., Ltd.

MS307



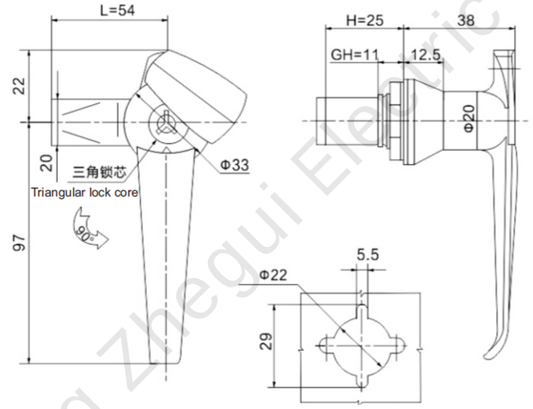

材质：锌合金、铝合金
表面处理或颜色：亮铬、亮白色
适用门板厚度：1-4mm

Material:zinc alloy, aluminum alloy.
Surface treatment or color:bright chrome, bright white.
Applicable door thickness:1-4mm.

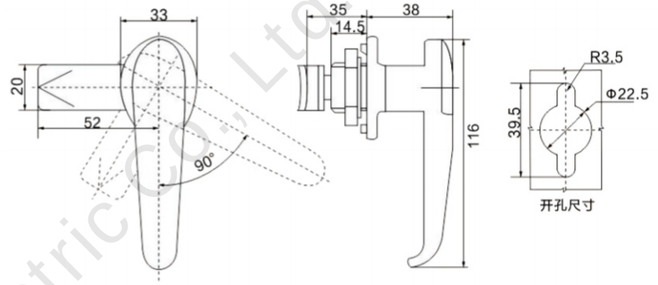

MS317



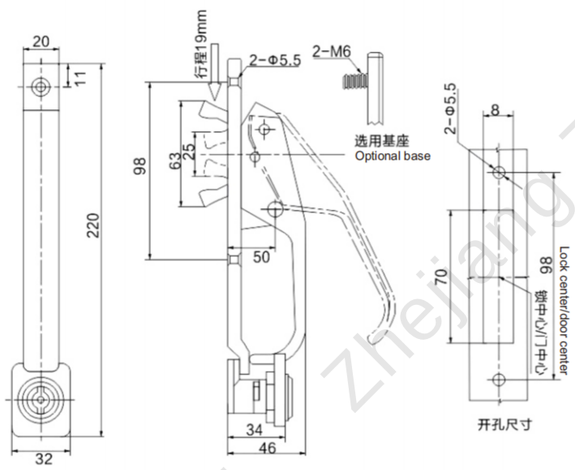

材质：锌合金、铝合金
表面处理或颜色：纳米喷塑、灰色
功能说明：旋转锁芯，提起把手，实现开启或锁闭

Material:zinc alloy, aluminum alloy.
Surface treatment or color:nano spray, gray.
Function description: Rotate the lock core, lift the handle, to open or lock.

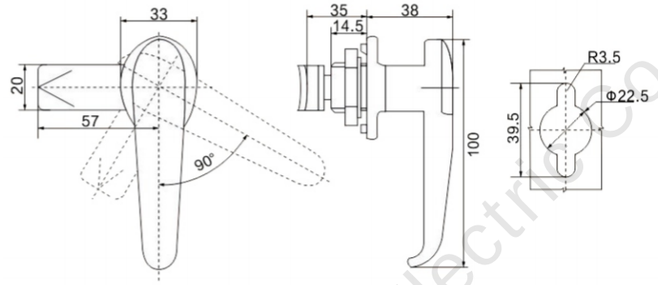

材质：锌合金、铝合金
表面处理或颜色：亮铬、拉丝铬
功能说明：旋转把手90°实现开启和锁闭

Material:zinc alloy, aluminum alloy.
Surface treatment or color:bright chrome, brushed chrome.
Function description: Rotate the handle 90° to open and lock.

MS308

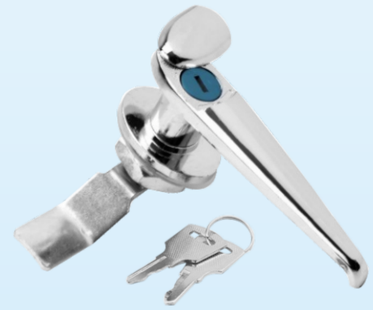

MS308-2



MS308-3



MS308-3（月牙）



MS308-3（月牙钢）

Zhejiang Zhegui Electric Co., Ltd.

MS324



MS324-1



MS324-2



MS324-3

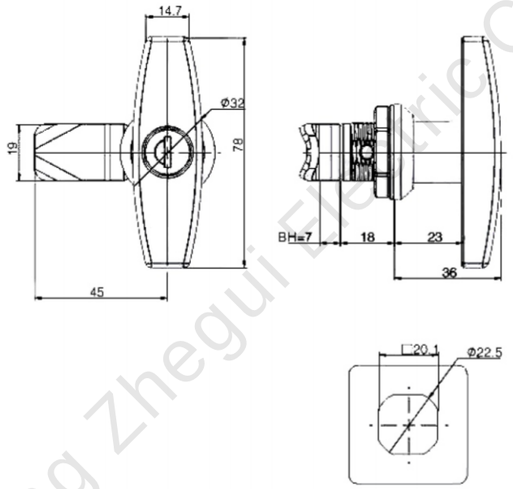

材质：锌合金
表面处理或颜色：镀铬
功能说明：适应单点闭锁，可供两点、三点锁闭使用，
实现左、右开启功能，旋转 90度。

Material:zinc alloy.
Surface treatment or color:Chrome plating.
Function description: Functions and uses: Adapt to single point locking,
can be used for two points, three points locking,
to achieve left and right opening function,
rotation 90 degrees.

材质：锌合金
表面处理或颜色：亚麻黑
功能说明：实现左、右开启功能，旋转 90度

Material:zinc alloy.
Surface treatment or color:flax black.
Function description: to achieve left and right opening function, rotate 90 degrees.

A45



A45-1

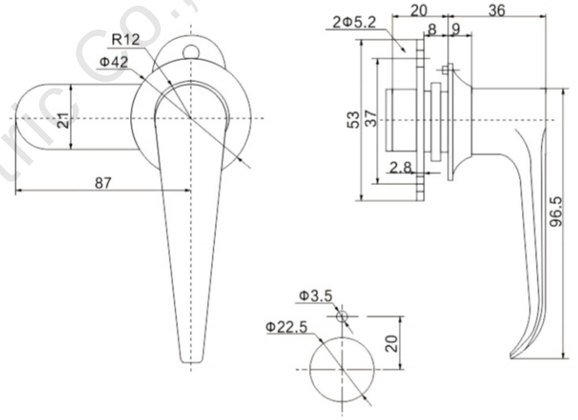



A45-2

材质：锌合金、铝合金
表面处理或颜色：亮铬、拉丝铬
适用门板厚度：1-1.5mm

Material:zinc alloy, aluminum alloy.
Surface treatment or color:bright chrome, brushed chrome.
Applicable door thickness:1-1.5mm.

Zhejiang Zhegui Electric Co., Ltd.

MS731

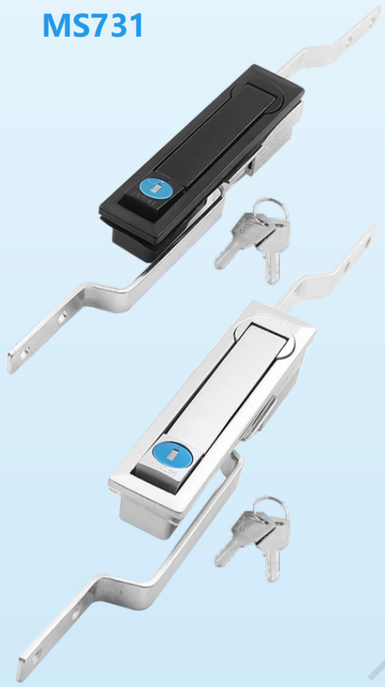

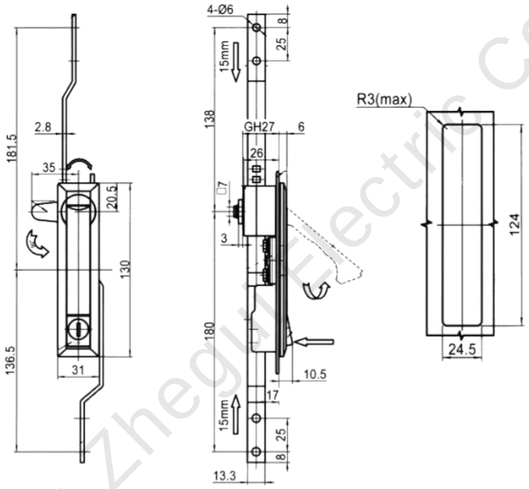

材质：锌合金
表面处理或颜色：喷塑黑、电镀亚光铬、纳米哑光漆
功能说明：快速开启，手柄90°旋转，实现开启闭锁。

Material:zinc alloy.
Surface treatment or color:spray black, electroplating matte chrome, nano matte paint
Function description: quick opening, 90° rotation of the handle, to open the lock.

MS731-4





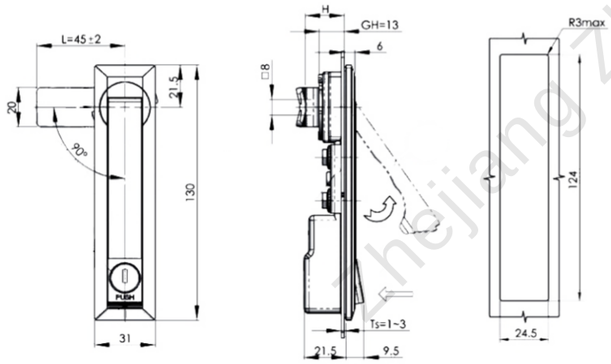

材质：锌合金
表面处理或颜色：喷塑黑、电镀亚光铬、纳米哑光漆
功能说明：快速开启，手柄90°旋转，实现开启闭锁。

Material:zinc alloy.
Surface treatment or color:spray black, electroplating matte chrome, nano matte paint
Function description: quick opening, 90° rotation of the handle, to open the lock.

MS801



MS801-1



MS801-1-1

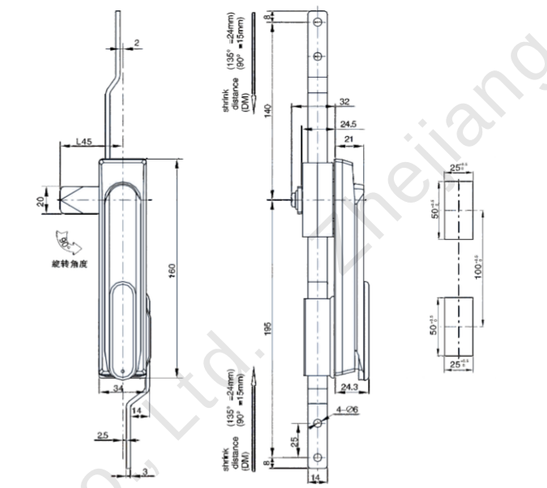

材质：锌合金
表面处理或颜色：纳米喷塑、磨砂黑
功能说明：打开防水盖,旋转锁芯,弹出把手旋转，实现开启或锁闭。

Material:zinc alloy.
Surface treatment or color:Nano spray, frosted black.
Function description: Open the waterproof cover, rotate the lock core, pop out the handle and rotate to realize opening or locking.

MS807



MS807-1



MS807-2

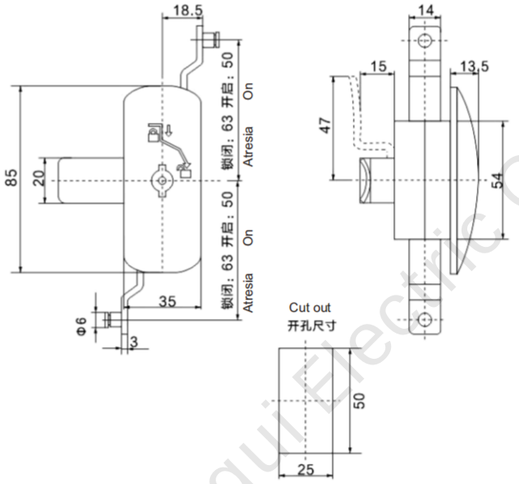

材质：黑色ABS主体、齿轮盒，锌合金锁芯、镀锌钢栓和齿条。
表面处理或颜色：黑色、灰色

Material:Black ABS body, gear box, zinc alloy lock core, galvanized steel bolt and rack.
Surface treatment or color:black,gray.

Zhejiang Zhegui Electric Co., Ltd.

MS820



MS820(三角)

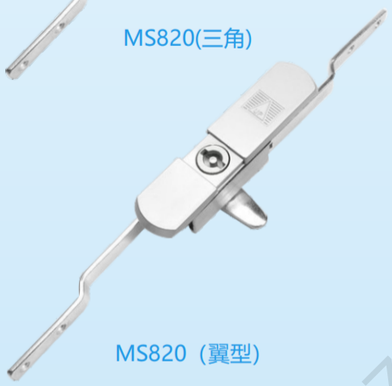

MS820（翼型）

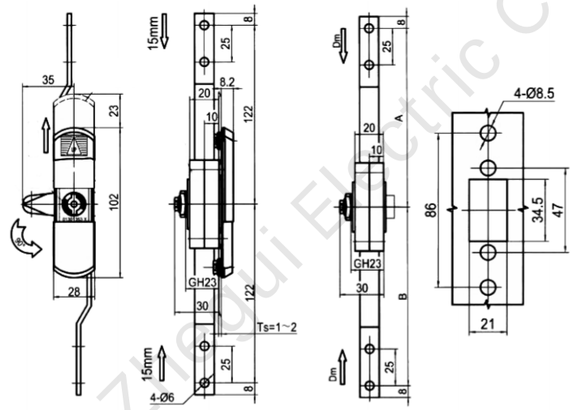

材质：锌合金
表面处理或颜色：电镀亚光铬、纳米哑光漆
功能说明：快速开启，锁芯90°旋转，实现开启闭锁。

Material:zinc alloy.
Surface treatment or color:electroplating matte chrome, nano matte paint
Function description: Fast opening, 90° rotation of the lock core to realize the opening of the lock.

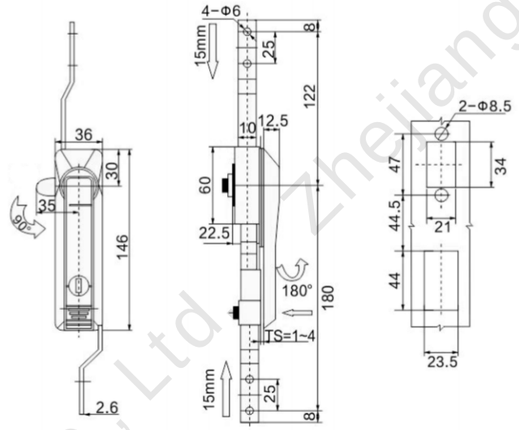

材质：锌合金
表面处理或颜色：纳米喷塑亚黑、纳米喷漆亚光
功能说明：按下按钮，弹出把手旋转，带动拉杆锁片，实现开启或锁闭

Material:zinc alloy.
Surface treatment or color:Nano spray plastic subblack, nano paint matte.
Function description: Press the button, pop out the handle rotation, drive the tie rod lock plate, to realize the opening or locking

MS828



MS828(黑色)



MS828(银色)

MS821

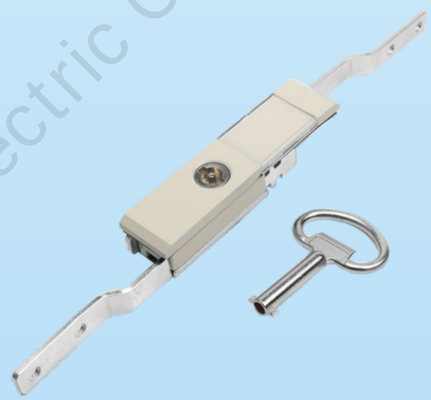

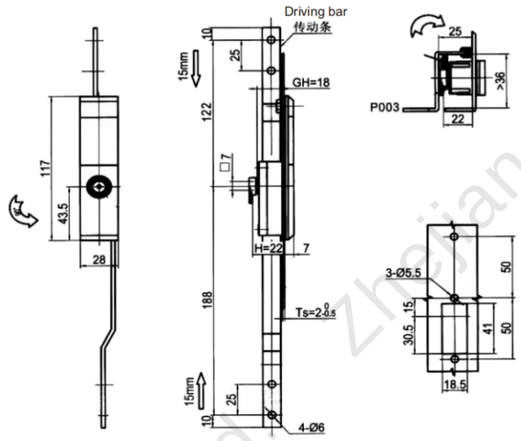

材质：锌合金
表面处理或颜色：电镀亚光铬、纳米哑光漆
功能说明：快速开启，锁芯90°旋转，实现开启闭锁。

Material:zinc alloy.
Surface treatment or color: electroplating matte chrome, nano matte paint
Function description: Fast opening, 90° rotation of the lock core to realize the opening of the lock.

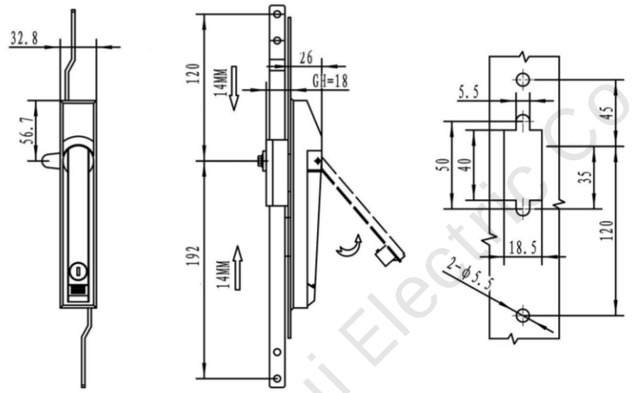

材质：锌合金
表面处理或颜色：纳米喷塑亚黑、白灰色
功能说明：按下按钮，弹出把手旋转，带动拉杆锁片，实现开启或锁闭

Material:zinc alloy.
Surface treatment or color:Nano spray plastic subblack, White gray.
Function description: Press the button, pop out the handle rotation, drive the tie rod lock plate, to realize the opening or locking

MS829



MS829(黑色)



MS829(灰色)

Zhejiang Zhegui Electric Co., Ltd.

MS830



MS830(黑色)



MS830(银色)



MS830(米色)

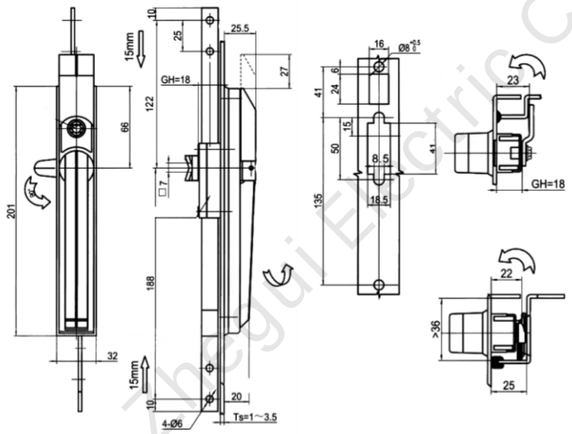

材质：锌合金
表面处理或颜色：喷塑基座、电镀亚光铬、纳米哑光漆
功能说明：快速开启，手柄90°旋转，实现开启闭锁。

Material:zinc alloy.
Surface treatment or color:Spray base, electroplating matte chrome, nano matte paint
Function description: quick opening, 90° rotation of the handle, to open the lock.

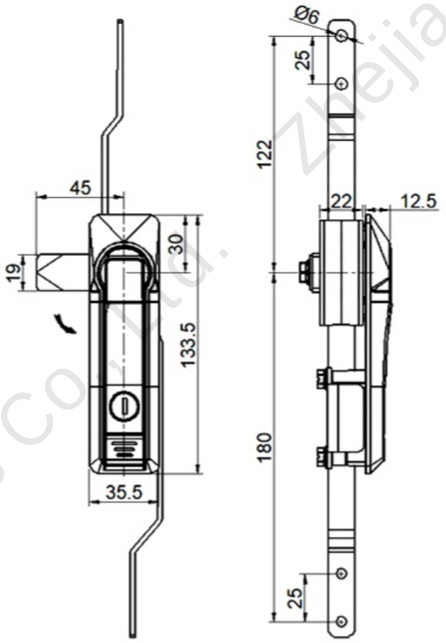

MS831



MS831(黑色)



MS831(银色)

MS830-3



MS30-3(翼型)



MS30-3(一字)

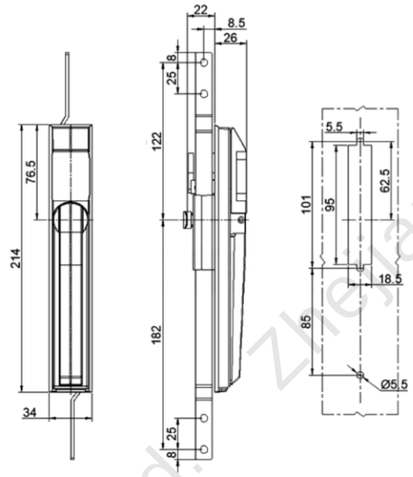

材质：锌合金
表面处理或颜色：喷塑基座、电镀亚光铬、纳米哑光漆
功能说明：快速开启，手柄90°旋转，实现开启闭锁。

Material:zinc alloy.
Surface treatment or color:Spray base, electroplating matte chrome, nano matte paint
Function description: quick opening, 90° rotation of the handle, to open the lock.

MS819

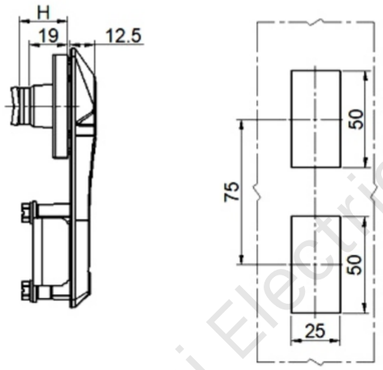

材质：锌合金
表面处理或颜色：纳米喷塑亚黑、纳米喷漆亚光
功能说明：按下按钮，弹出把手旋转，带动拉杆锁片，实现开启或锁闭

Material:zinc alloy.
Surface treatment or color:Nano spray plastic subblack, nano paint matte.
Function description: Press the button, pop out the handle rotation, drive the tie rod lock plate, to realize the opening or locking



Zhejiang Zhegui Electric Co., Ltd.

MS832



MS832-1



MS832-1P

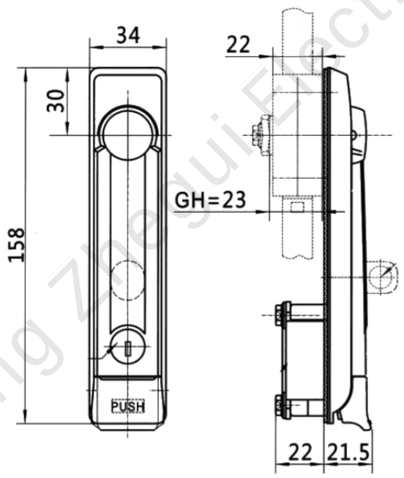

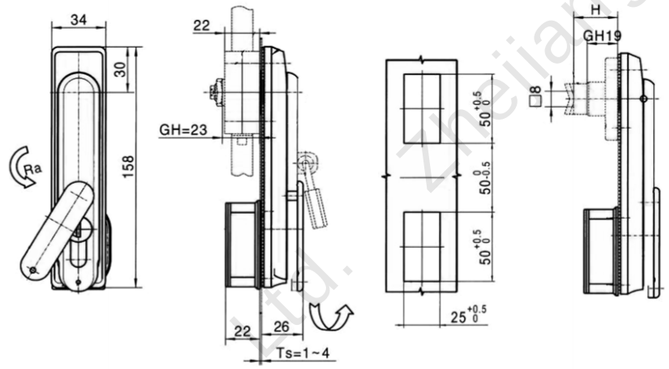

材质：锌合金
表面处理或颜色：纳米喷塑、磨砂黑
功能说明：打开防水盖,旋转锁芯,弹出把手旋转，实现开启或锁闭。

Material:zinc alloy.
Surface treatment or color:Nano spray, frosted black.
Function description: Open the waterproof cover, rotate the lock core, pop out the handle and rotate to realize opening or locking.

MS840



MS840-1



MS840-1P

MS833



MS833-1



MS833-1P

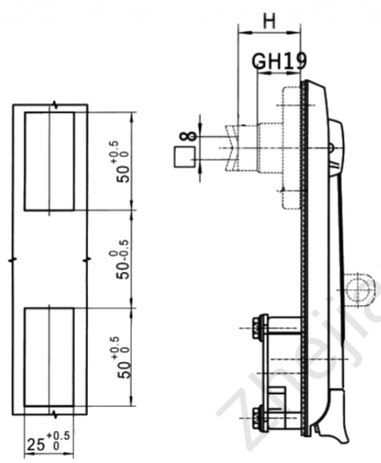

材质：锌合金
表面处理或颜色：喷塑黑
功能说明：快速开启，手柄90°旋转，实现开启闭锁。

Material:zinc alloy.
Surface treatment or color:Plastic spray black
Function description: quick opening, 90° rotation of the handle, to open the lock.

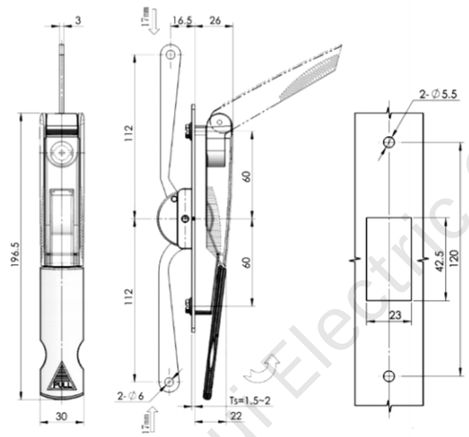

材质：锌合金
表面处理或颜色：青灰色 、黑色
功能说明：打开防水盖,旋转锁芯,弹出把手旋转，实现开启或锁闭。

Material:zinc alloy.
Surface treatment or color:Bluish gray, black.
Function description: Open the waterproof cover, rotate the lock core, pop out the handle and rotate to realize opening or locking.

MS853



Zhejiang Zhegui Electric Co., Ltd.

MS867



MS867-2



MS867-8

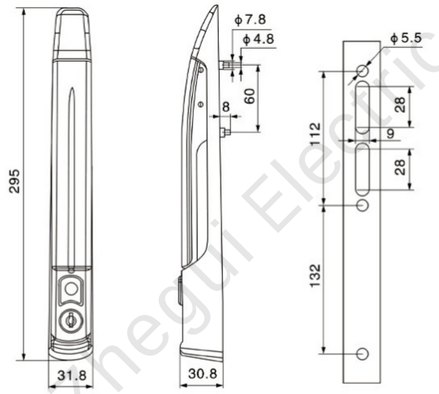

材质：锌合金
表面处理或颜色：白灰色
功能说明：抗强度，扭力，磨损性强，适宜于各种开关柜、控制柜、网络机柜、GGD柜、AE箱等一系列工业机箱机柜。。

Material:zinc alloy.
Surface treatment or color:White gray.
Function description: Strong strength, torque, wear, suitable for a variety of switchgear, control cabinet, network cabinet, GGD cabinet, AE box and a series of industrial chassis cabinet.

HX002

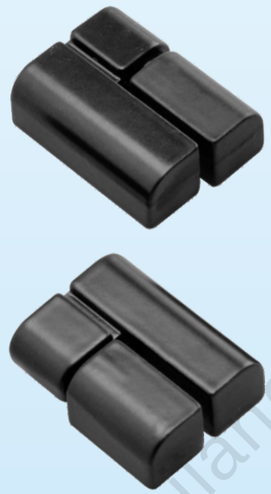

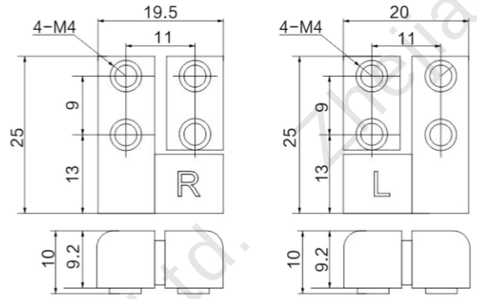

材质：锌/铝合金
表面处理或颜色：纳米喷塑亚黑色
备注：此款铰链分左右,可旋转角度180°

Material: Zinc/aluminum alloy.
Surface treatment or color: nano spray subblack.
Note: This type of hinge is divided into about, can rotate Angle 180°.

GGD



新GGD-1



新GGD-2

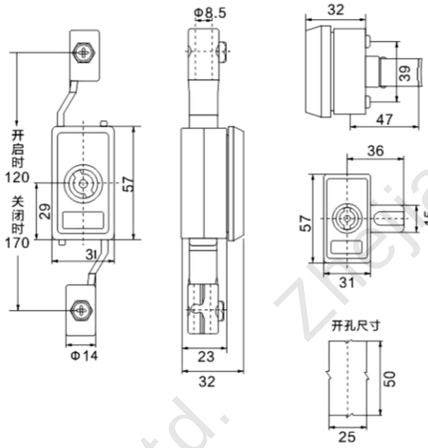

材质：A3板 4#锌合金
表面处理或颜色：锌彩
功能说明：快速开启，手柄90°旋转，实现开启闭锁。

Material:A3 plate 4# zinc alloy.
Surface treatment or color:Zinc color.
Function description: Adopt gear, rack drive, can be two points, three points locking. Interchangeable left and right door installation, beautiful appearance, strong waterproof performance.

HX027

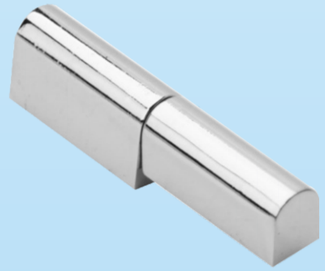

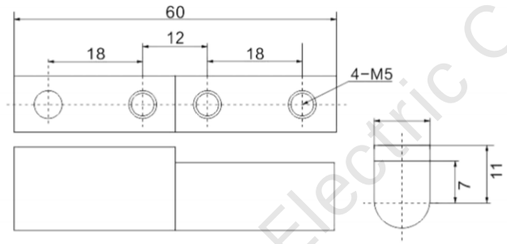

材质：锌/铝合金
表面处理或颜色：镀铬、亮光色
功能说明：可开启角度180°

Material: Zinc/aluminum alloy.
Finish or color: chrome plating, bright color.
Function description: Can open Angle 180 °.

Zhejiang Zhegui Electric Co., Ltd.

HX201-2

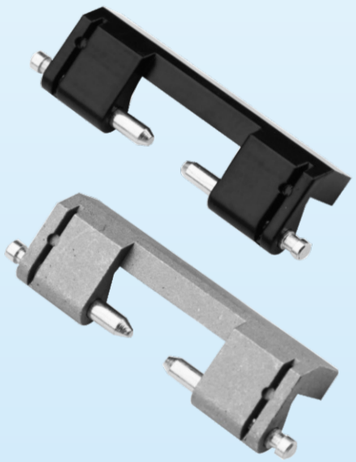

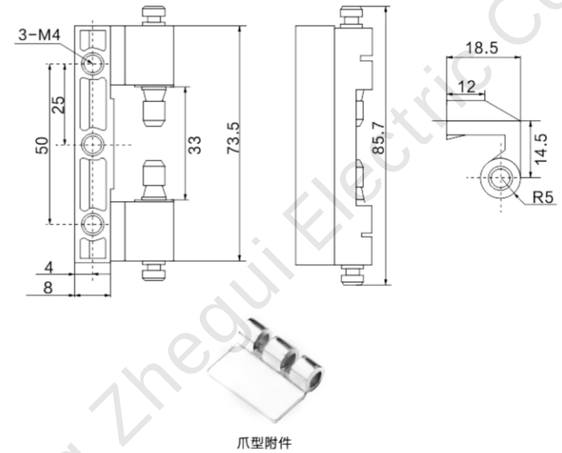

材质：锌/铝合金
表面处理或颜色：纳米喷塑亚黑色，表面磨砂
功能说明：可开启角度130°

Material: Zinc/Aluminum.
Surface treatment or color: nano spray subblack, surface frosted.
Function description: Can open Angle 130°.

HX201-3



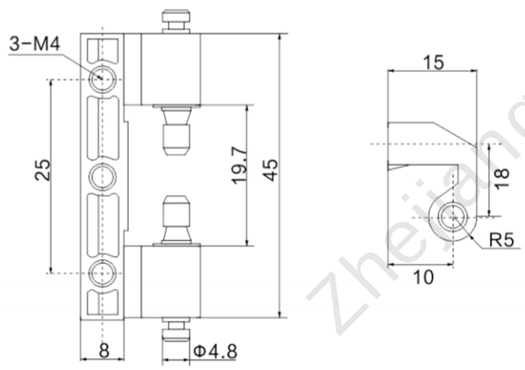

材质：锌/铝合金
表面处理或颜色：纳米喷塑亚黑色，表面磨砂
功能说明：可开启角度130°

Material: Zinc/Aluminum.
Surface treatment or color: nano spray subblack, surface frosted.
Function description: Can open Angle 130°.

HX203-1

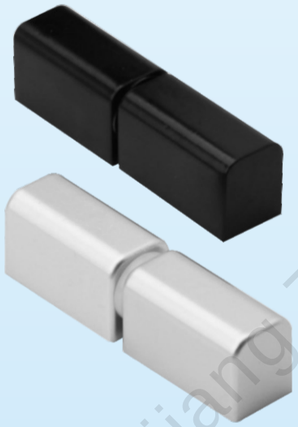

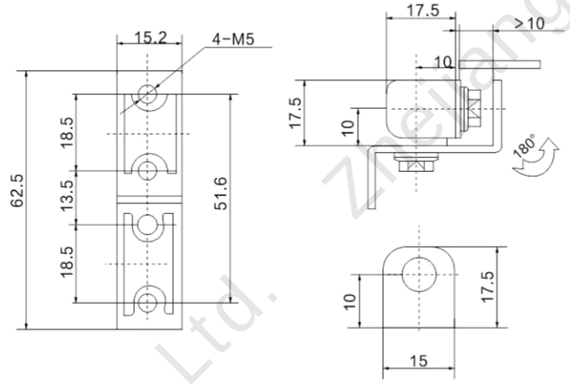

材质：锌/铝合金
表面处理或颜色：纳米喷塑,纳米喷漆亚光色
备注：可开启角度180°

Material: Zinc/aluminum alloy.
Surface treatment or color: nano spray, nano paint matte color.
Note: The opening Angle is 180°

HX203-2



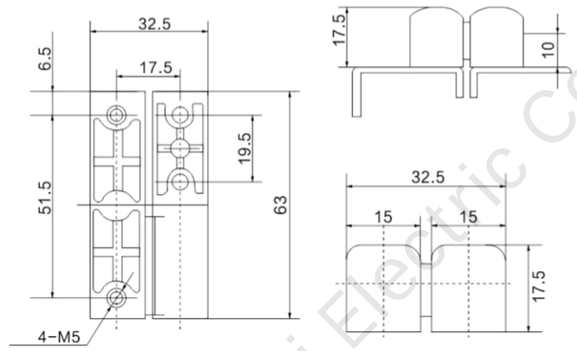

材质：锌/铝合金
表面处理或颜色：纳米喷塑,纳米喷漆亚光色
备注：可开启角度180°,此款铰链分左右。

Material: Zinc/aluminum alloy.
Surface treatment or color: nano spray, nano paint matte color.
Note: The opening Angle is 180° this hinge is divided into two parts.

Zhejiang Zhegui Electric Co., Ltd.

HX030

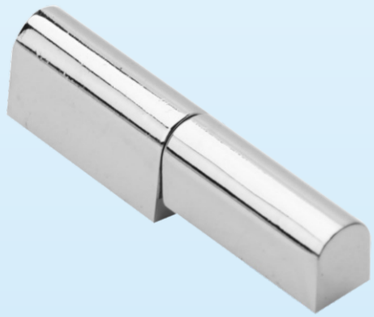

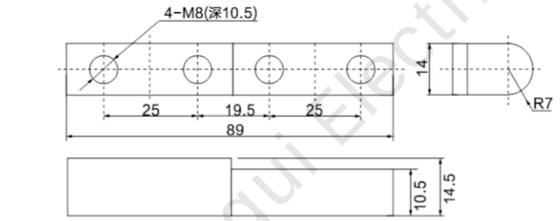

材质：锌/铝合金
表面处理或颜色：镀铬、亮光色
功能说明：可开启角度180°

Material: Zinc/aluminum alloy.
Finish or color: chrome plating, bright color.
Function description: Can open Angle 180 °.

HX040钢

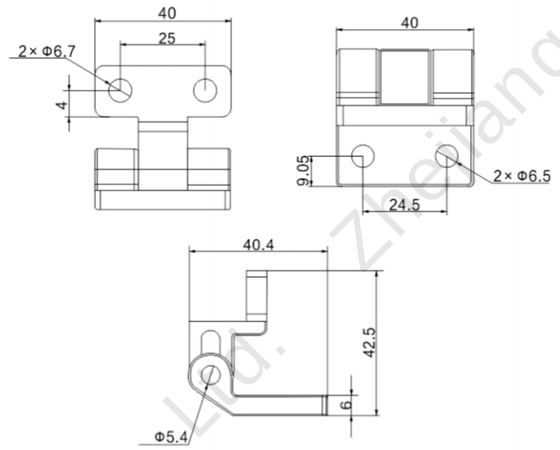

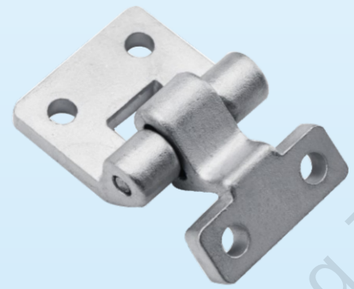

材质：304不锈钢
表面处理或颜色：磨砂、不锈钢本色
备注：可旋转角度120°

Material: 304 stainless steel.
Surface treatment or color: frosted, stainless steel.
Note: Can rotate Angle 120°.

抽屉柜铰链



抽屉柜铰链-24



抽屉柜铰链-34

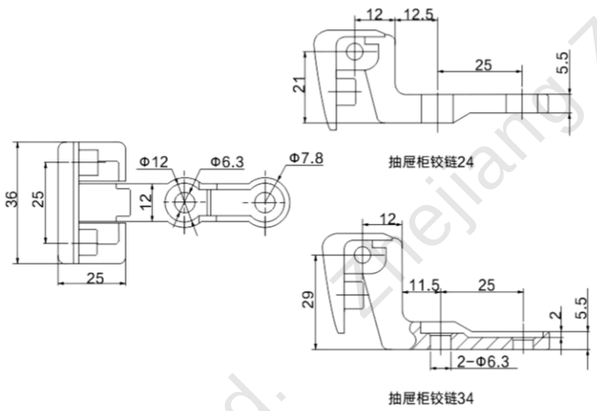

材质：锌/铝合金
表面处理或颜色：纳米喷塑、亚黑

Material: Zinc/aluminum alloy.
Surface treatment or color: nano spray, sub-black.

HX201-1

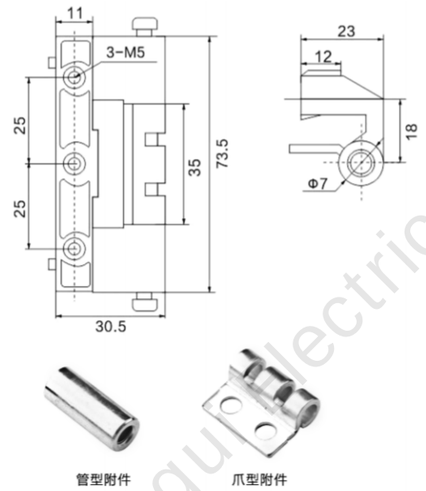

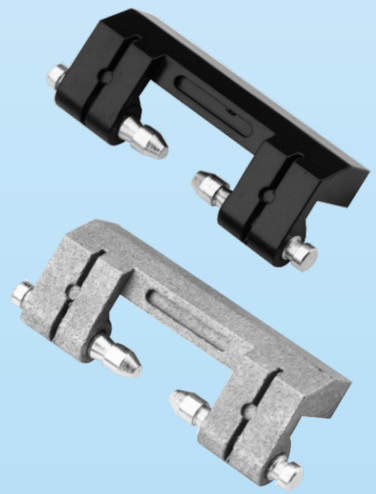

材质：锌/铝合金/不锈钢
表面处理或颜色：纳米喷塑亚黑色，表面磨砂
功能说明：可开启角度130°

Material: Zinc/Aluminum/stainless steel.
Surface treatment or color: nano spray subblack, surface frosted.
Function description: Can open Angle 130°.

Zhejiang Zhegui Electric Co., Ltd.

HX203-3

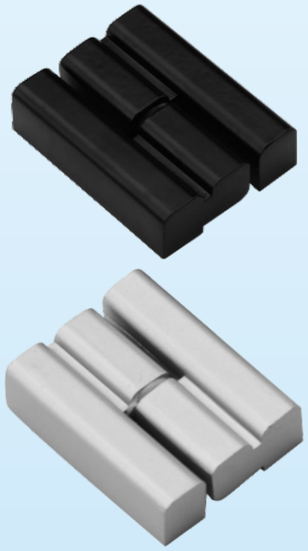

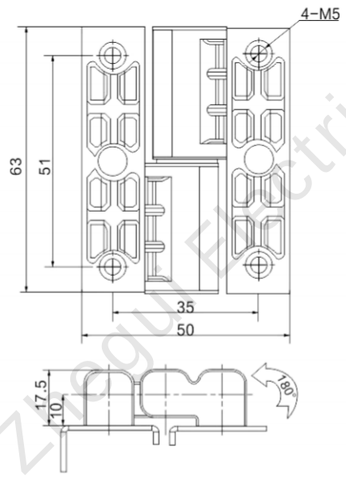

材质：锌/铝合金
表面处理或颜色：纳米喷塑,纳米喷漆亚光色
备注：可开启角度180°,此款铰链分左右。

Material: Zinc/aluminum alloy.
Surface treatment or color: nano spray, nano paint matte color.
Note: The opening Angle is 180° this hinge is divided into two parts.

HX204-1

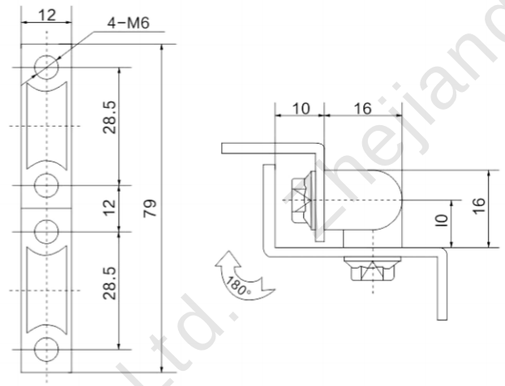



材质：锌/铝合金/不锈钢
表面处理或颜色：纳米喷塑亚黑色,亮光色
功能说明：可开启角度180°

Material: Zinc/Aluminum/stainless steel.
Surface treatment or color: nano spray subblack, bright color.
Function description: Open Angle 180°.

HX204-3

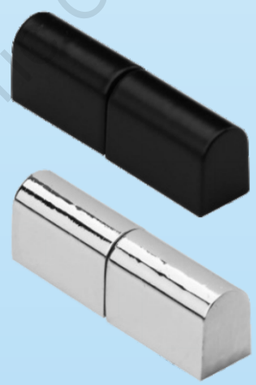

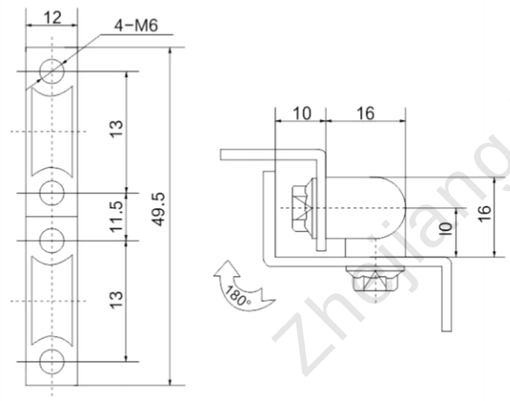

材质：锌/铝合金/不锈钢
表面处理或颜色：纳米喷塑亚黑色,亮光色
功能说明：可开启角度180°

Material: Zinc/Aluminum/stainless steel.
Surface treatment or color: nano spray subblack, bright color.
Function description: Open Angle 180°.

HX206-1



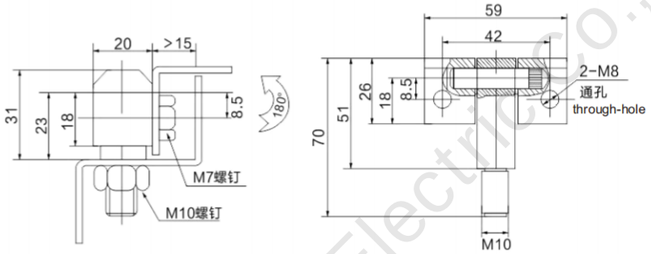



材质：锌/铝合金/不锈钢
表面处理或颜色：纳米喷塑亚黑色,亮光色,蓝色
功能说明：可开启角度180°

Material: Zinc/Aluminum/stainless steel/blue.
Surface treatment or color: nano spray subblack, bright color.
Function description: Open Angle 180°.

Zhejiang Zhegui Electric Co., Ltd.

HX208

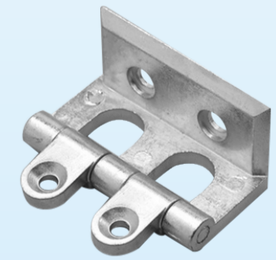



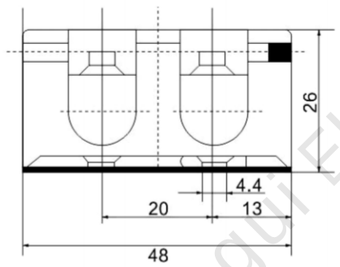

材质：锌/铝合金
表面处理或颜色：纳米喷塑黑、表面镀锌白色
功能说明：直角型铰链

Material: Zinc/aluminum alloy.
Surface treatment or color: nano spray black, surface galvanized white.
Function description: Right Angle hinge.

HX209





HX209-2





HX209-2-A

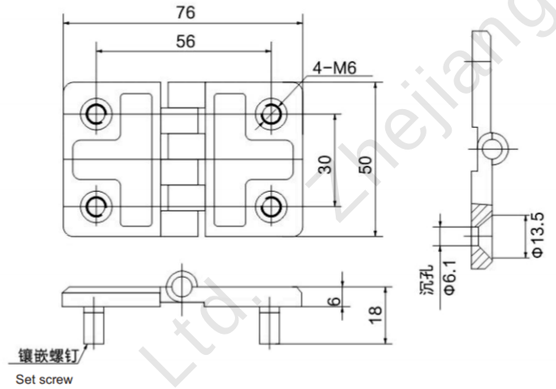

材质：锌/铝合金
表面处理或颜色：喷塑亚黑色,镀铬亮白色
功能说明：可开启角度180°

Material: Zinc/Aluminum.
Surface treatment or color: Spray subblack, chrome plating bright white.
Function description: Open Angle 180°.

HX209



HX209(亚黑)



HX209-A(亮光)

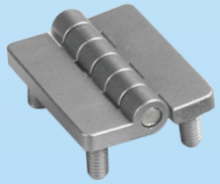

HX209-1C(亚光)

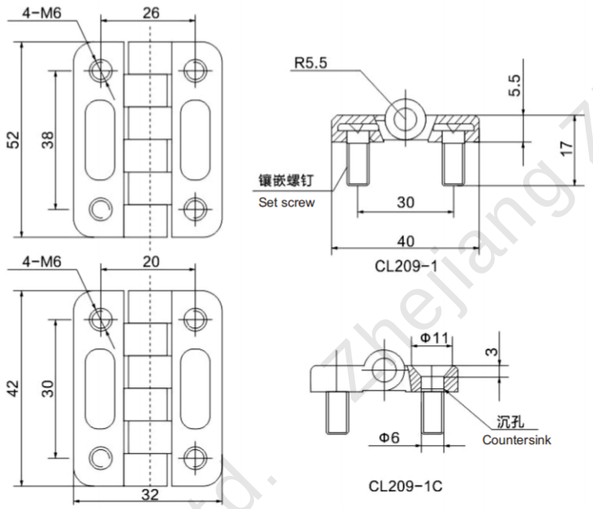

材质：锌/铝合金/不锈钢
表面处理或颜色：喷塑亚黑色,镀铬亮白色
功能说明：可开启角度180°

Material: Zinc/Aluminum/stainless steel.
Surface treatment or color: Spray subblack, chrome plating bright white.
Function description: Open Angle 180°.

HX230





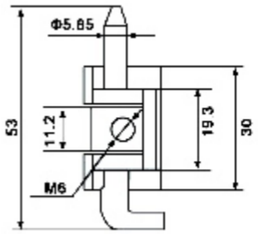

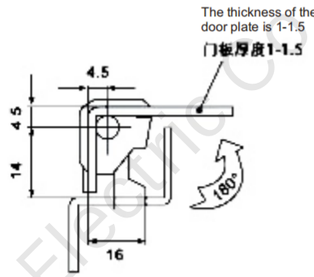

材质：锌/铝合金/不锈钢
表面处理或颜色：喷塑亚黑,镀铬亮白,纳米亚光
功能说明：可开启角度180°

Material: Zinc/Aluminum/stainless steel.
Surface treatment or color: spray subblack, chrome plating bright white, nano matte.
Function description: Cassette hinge, rotated about 180°.

Zhejiang Zhegui Electric Co., Ltd.

HX212-1



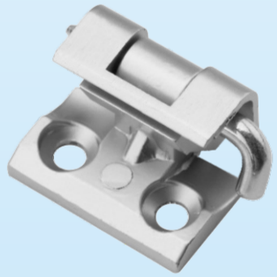

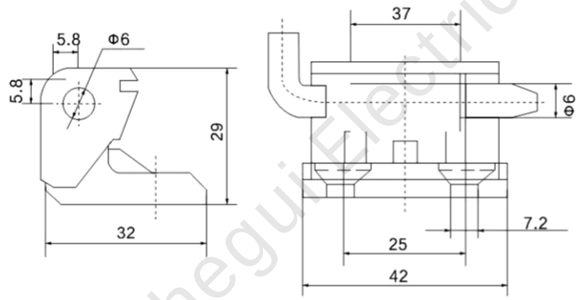

材质：锌/铝合金
表面处理或颜色：喷塑亚黑,镀铬亮白,纳米亚光
功能说明：卡式铰链，转动约180°

Material: Zinc/aluminum alloy
Surface treatment or color: spray subblack, chrome plating bright white, nano matte.
Function description: Cassette hinge, rotated about 180°.

HX212-2



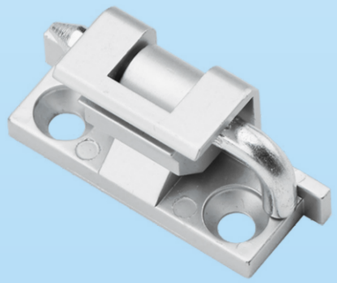

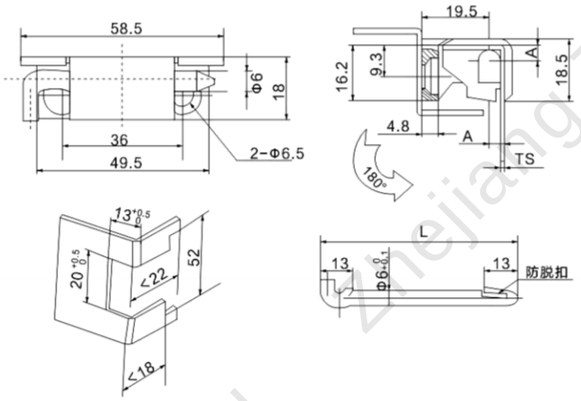

材质：锌/铝合金
表面处理或颜色：喷塑亚黑,镀铬亮白,纳米亚光
功能说明：卡式铰链，转动约180°

Quality: Zinc/aluminum alloy
Surface treatment or color: spray subblack, chrome plating bright white, nano matte.
Function description: Cassette hinge, rotated about 180°.

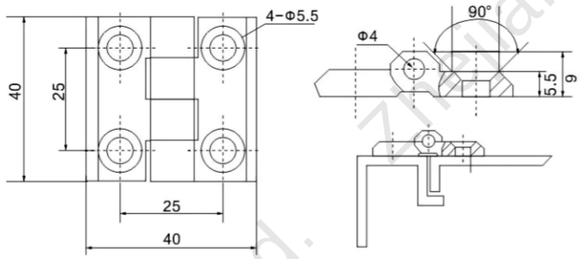

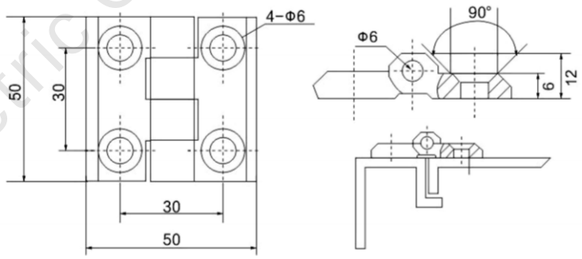

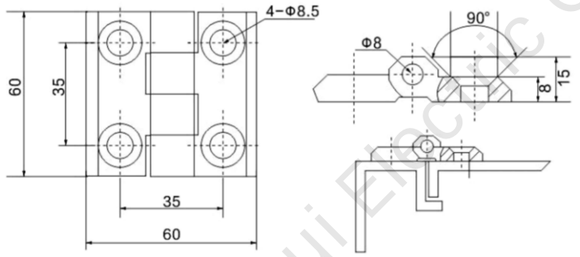

材质：锌/铝合金/不锈钢
表面处理或颜色：喷塑亚黑,镀铬亮白,纳米亚光
功能说明：可开启角度180°

Material: Zinc/Aluminum/stainless steel/blue.
Surface treatment or color: spray subblack, chrome plating bright white, nano matte.
Function description: Open Angle 180°.

HX218



HX218-40(亚黑)



HX218-50(亮白)

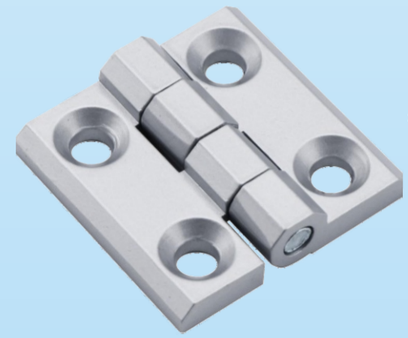

HX218-60(亚光)

Zhejiang Zhegui Electric Co., Ltd.

HX219

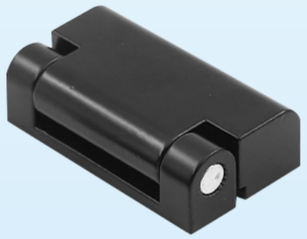



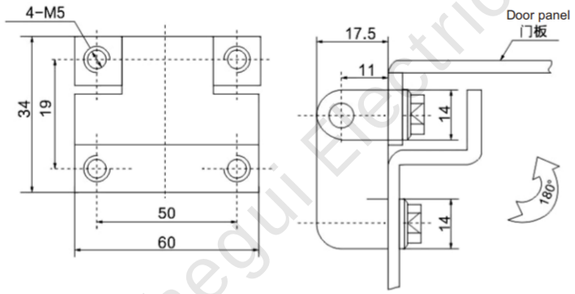

材质：锌/铝合金/不锈钢
表面处理或颜色：喷塑亚黑,镀铬亮白,纳米亚光
功能说明：可开启角度180°

Material: Zinc/Aluminum/stainless steel/blue.
Surface treatment or color: spray subblack, chrome plating bright white, nano matte.
Function description: Open Angle 180°.

HX233

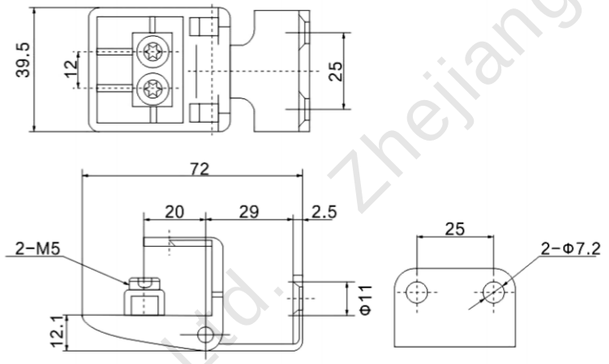

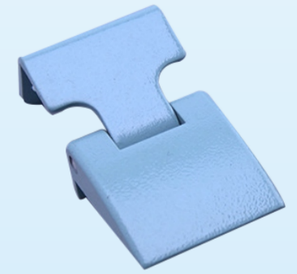



材质：锌/铝合金
表面处理或颜色：纳米喷塑亚黑色,沙纹蓝
功能说明：爪型铰链，可开启角度180°

Material: Zinc/aluminum alloy.
Surface treatment or color: nano spray plastic subblack, sand blue.
Function description: Claw hinge, can open Angle 180°.

HX225

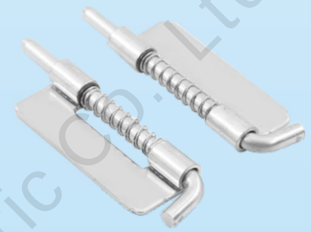

HX225-1

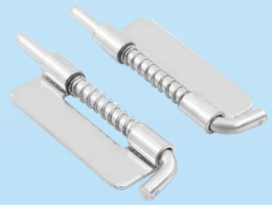

HX225-2



HX225-3

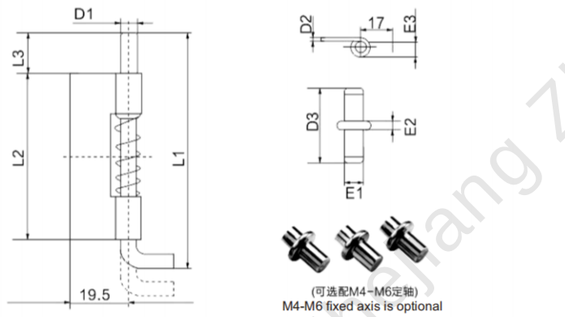

产品型号 Product model	基本尺寸 Basic size								
	L1	L2	L3	D1	D2	D3	E1	E2	E3
HX225-1	88	62	17.5	5.7	1.5	15.7	Φ6	2	13.5
HX225-2	72	50	15	4.5	1.4	15	Φ5	1.8	6.8
HX225-3	53	32	13	4	1.4	12	Φ4	1.5	6

材质：冷轧钢板/不锈钢
表面处理或颜色：彩锌、镀白
功能说明：门销

Material: cold rolled steel/stainless steel.
Surface treatment or color: color zinc, white plating.
Function description: Door pin.

HX226

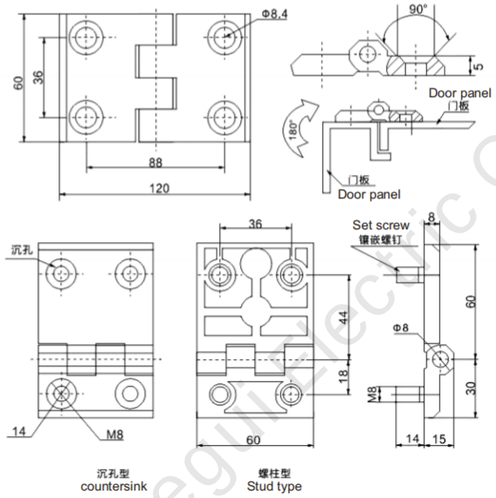

材质：锌/铝合金
表面处理或颜色：喷塑亚黑,镀铬亮白,纳米亚光
功能说明：可开启角度180°

Material: Zinc/aluminum alloy.
Surface treatment or color: spray subblack, chrome plating bright white, nano matte.
Function description: Cassette hinge, rotated about 180°.



HX226-3



HX226-4

Zhejiang Zhegui Electric Co., Ltd.

HX226

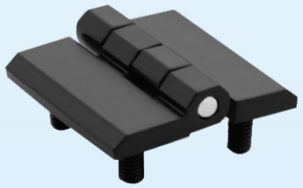

HX226-40(黑色)

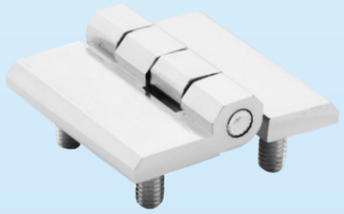

HX226-50(亚光)

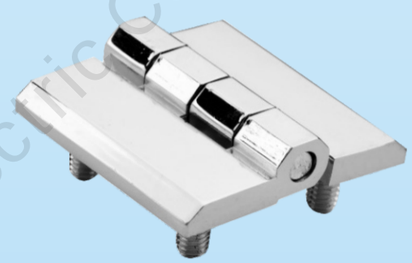

HX226-60(亚白)

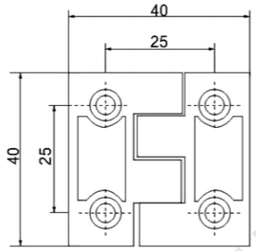

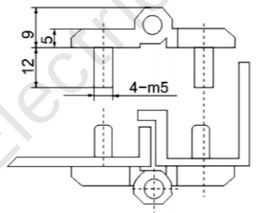

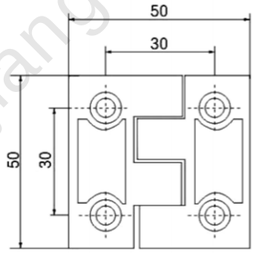

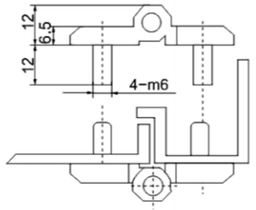

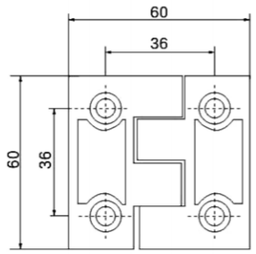

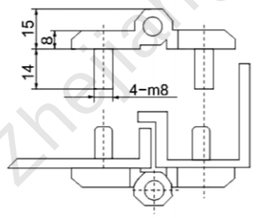

材质：锌/铝合金/不锈钢
表面处理或颜色：喷塑亚黑,镀铬亮白,纳米亚光
功能说明：可开启角度180°

Material: Zinc/Aluminum/stainless steel.
Surface treatment or color: spray subblack, chrome plating bright white, nano matte.
Function description: Cassette hinge, rotated about 180°.

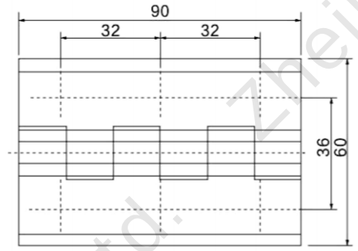

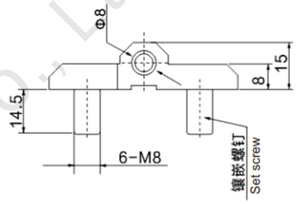

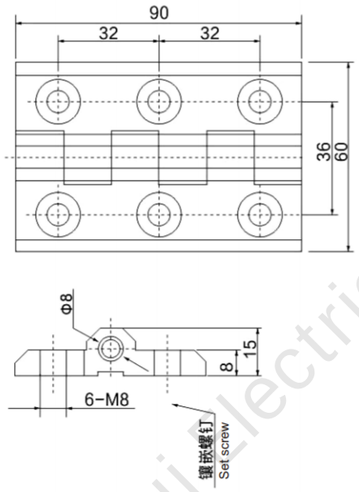

材质：锌/铝合金
表面处理或颜色：喷塑黑，亮白色，可选配不锈钢螺钉
功能说明：可开启角度180°

Material: Zinc/aluminum alloy.
Surface treatment or color: Spray black, bright white, optional stainless steel screws.
Function description: Cassette hinge, rotated about 180°.

HX226

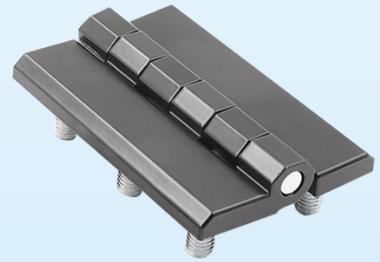

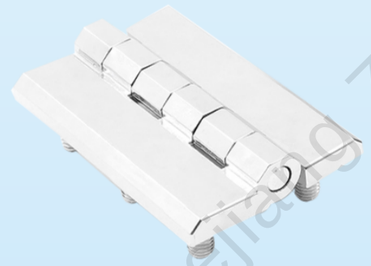

HX226-5A



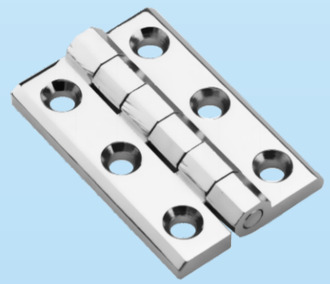

HX226-5

Zhejiang Zhegui Electric Co., Ltd.

HX234

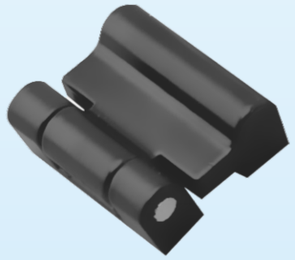

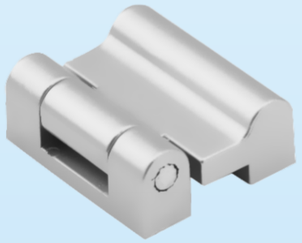

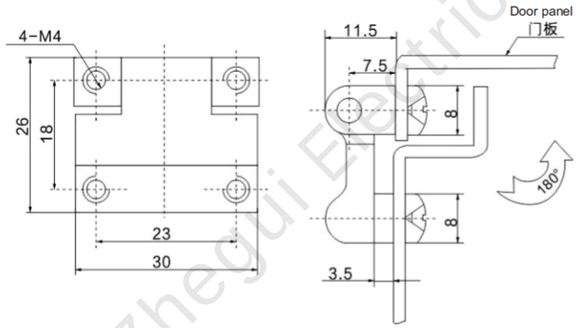

材质：锌/铝合金
表面处理或颜色：纳米喷塑,纳米喷漆亚光色
备注：可开启角度180°,此款铰链分左右。

Material: Zinc/aluminum alloy.
Surface treatment or color: nano spray, nano paint matte color.
Note: The opening Angle is 180° this hinge is divided into two parts.

HX253

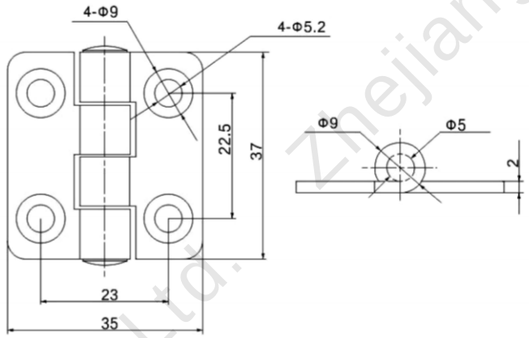



材质：304不锈钢、铁
表面处理或颜色：拉丝、不锈钢本色，铁镀锌
功能说明：带沉孔型，可开启角度180°

Material: 304 stainless steel, iron.
Surface treatment or color: brushed, stainless steel, galvanized iron.
Function description: With sunk hole, can open Angle 180.°

HX235

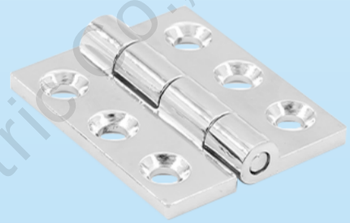

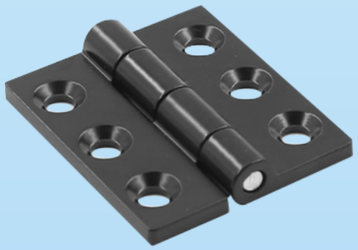

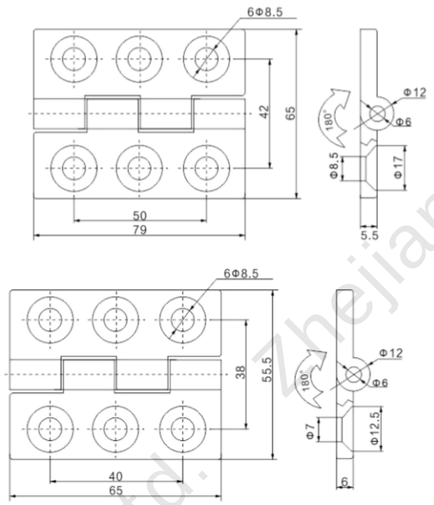

材质：锌/铝合金
表面处理或颜色：喷塑亚黑,镀铬亮白,纳米亚光
功能说明：可开启角度180°

Material:Zinc/Aluminum.
Surface treatment or color: spray subblack, chrome plating bright white, nano matte.
Function description: Cassette hinge, rotated about 180°.

F45

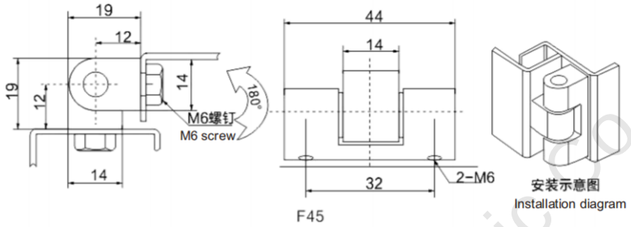

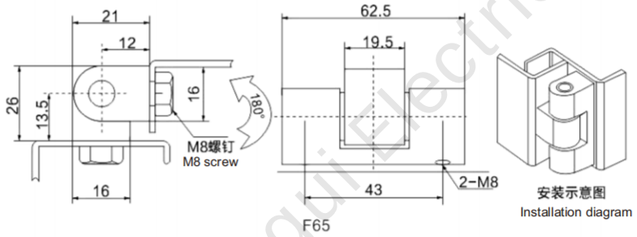

材质：锌/铝合金
表面处理或颜色：喷塑亚黑,镀铬亮白,纳米亚光
功能说明：2/3段圆柱形铰链可开启角度180°

Material: Zinc/aluminum alloy.
Surface treatment or color: spray subblack, chrome plating bright white, nano matte.
Function description: 2/3 section cylindrical hinge can be opened at 180°.

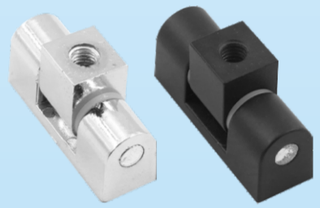

F45

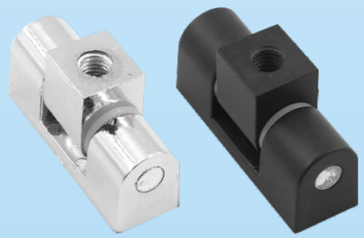

F65

Zhejiang Zhegui Electric Co., Ltd.

HX238-1

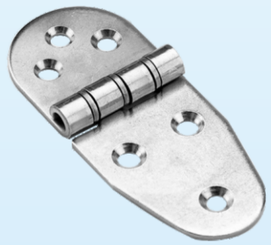

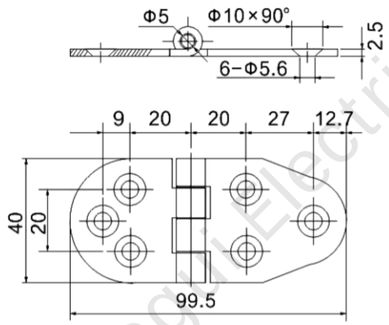

HX238-2

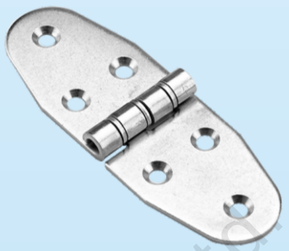

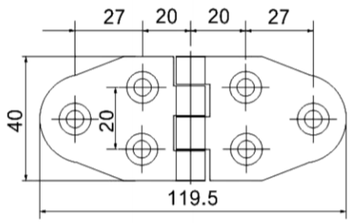

HX238-3

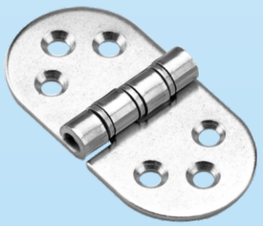

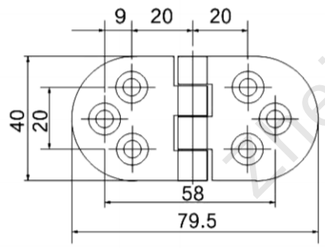

材质：304不锈钢、铁
表面处理或颜色：不锈钢本色，振光，铁镀锌

Material: 304 stainless steel, iron.
Surface treatment or color: stainless steel, vibrating light, galvanized iron.

LS506

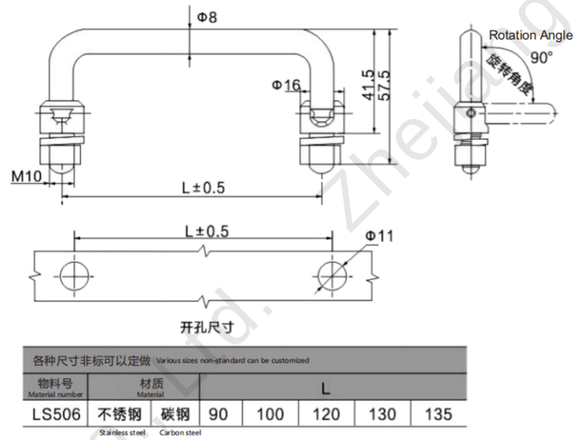

各种尺寸非标可以定做 Various sizes non-standard can be customized

物料号 Material number	材质 Material		L				
LS506	不锈钢 Stainless steel	碳钢 Carbon steel	90	100	120	130	135

材质：不锈钢、碳钢
表面处理或颜色：电镀亮铬
功能说明：双控折叠拉手

Material: stainless steel, carbon steel.
Finish or color: bright chrome plating.
Function description: Dual control folding handle.



LS507

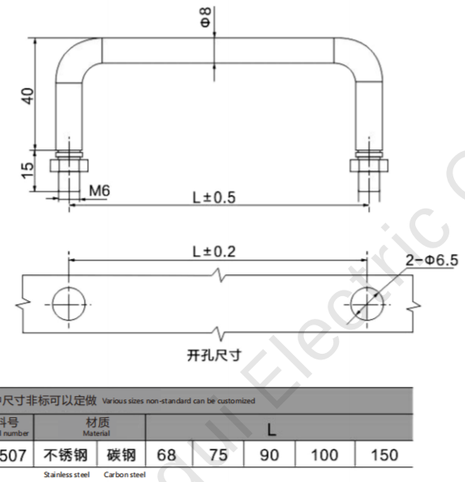

各种尺寸非标可以定做 Various sizes non-standard can be customized

物料号 Material number	材质 Material		L				
LS507	不锈钢 Stainless steel	碳钢 Carbon steel	68	75	90	100	150

材质：不锈钢、碳钢
表面处理或颜色：电镀亮铬
功能说明：外螺纹拉手

Material: stainless steel, carbon steel.
Finish or color: bright chrome plating.
Function description: external thread handle.



Zhejiang Zhegui Electric Co., Ltd.

LS511



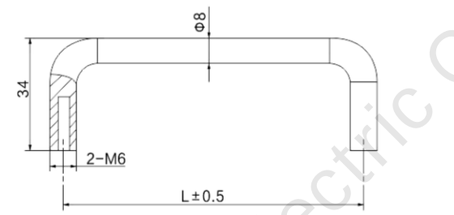

各种尺寸非标可以定做 Various sizes non-standard can be customized

物料号 Material number	材质 Material		L					
LS511	不锈钢 Stainless steel	碳钢 Carbon steel	90	100	120	135	149	155

材质：不锈钢、碳钢
表面处理或颜色：电镀亮铬
功能说明：内螺纹拉手

Material: stainless steel, carbon steel.
Finish or color: bright chrome plating.
Function description: internal thread handle.

LS505



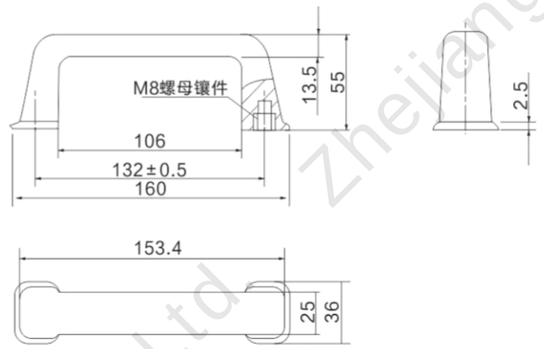

材质：ABS塑料
表面处理或颜色：喷塑黑
功能说明：拉手

Material: ABS plastic.
Finish or color: spray black.
Function Description: Handle.

LS518



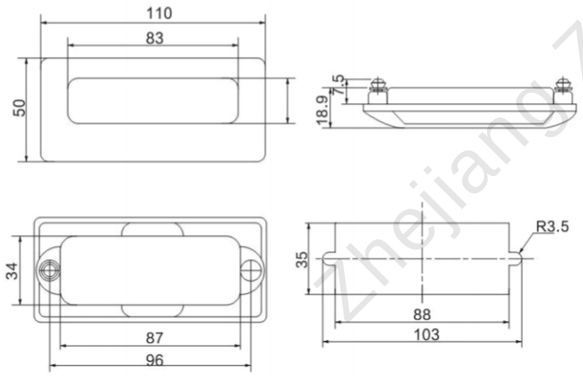

材质：锌/铝合金
表面处理或颜色：镀铬亮光色、纳米喷塑亚黑
功能说明：拉手

Material: Zinc/aluminum alloy.
Surface treatment or color: chrome-plated bright color, nano spray plastic subblack.
Function Description: Handle.

LS522



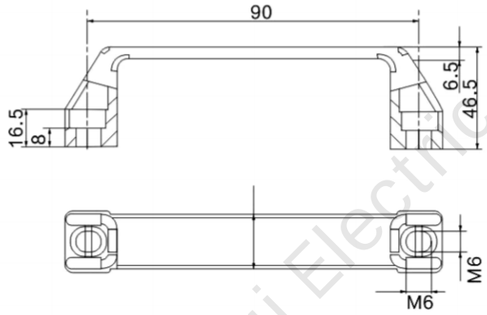

材质：锌/铝合金
表面处理或颜色：喷塑黑
功能说明：拉手

Material: Zinc/aluminum alloy.
Finish or color: spray black.
Function Description: Handle.

Zhejiang Zhegui Electric Co., Ltd.

LS523

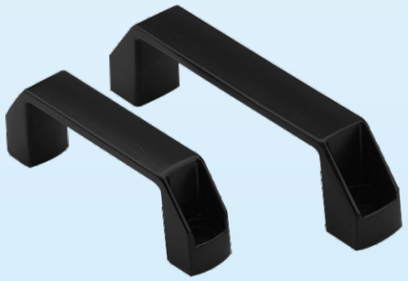

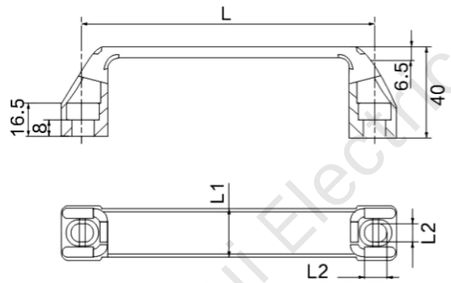

各种尺寸非标可以定做 Various sizes non-standard can be customized				
物料号 Material number	材质	L	L1	L2
LS523-90	铝合金 Aluminium alloy	90	19	M6
LS523-120	铝合金 Aluminium alloy	120	25	M8

材质：锌/铝合金
表面处理或颜色：喷塑黑
功能说明：拉手

Material: Zinc/aluminum alloy.
Finish or color: spray black.
Function Description: Handle.

LS528

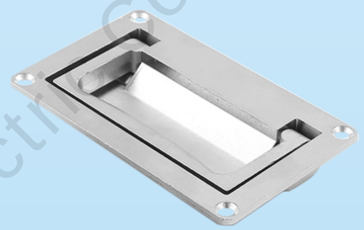

LS528-1

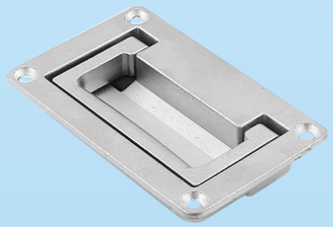

LS528-2

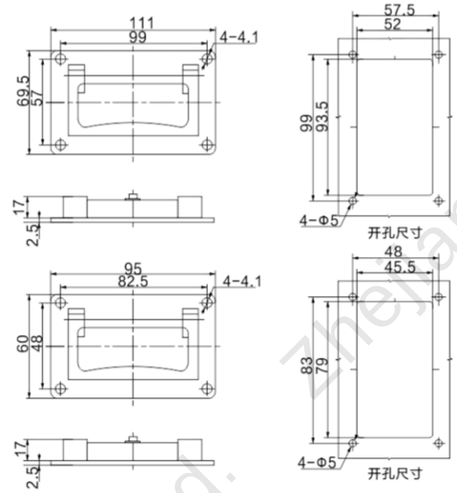

材质：锌合金
表面处理或颜色：喷砂、砂白
功能说明：拉手

Material: Zinc alloy.
Surface treatment or color: sandblasted, sanded white.
Function Description: Handle.

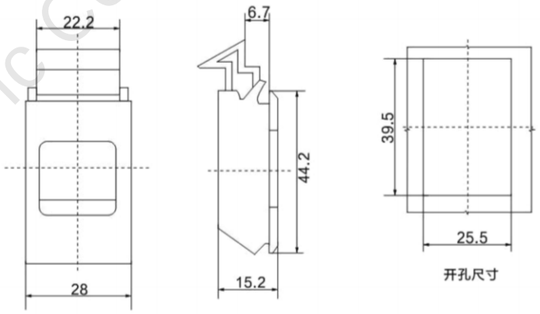

材质：增强塑料
表面处理或颜色：黑、灰、白、米色
功能说明：门销

Material: Reinforced plastic.
Finish or color: black, gray, white, beige.
Function description: Door pin.

735-2

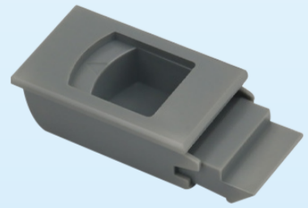

灰色



米色

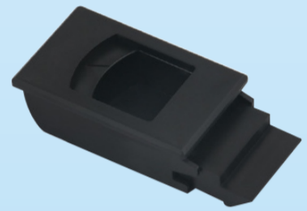

黑色



白色

Zhejiang Zhegui Electric Co., Ltd.

DKS-1



DKS-1(大号亚黑)



DKS-1(小号亚光)



DKS-1(大号亚黑)



DKS-1(小号亚光)

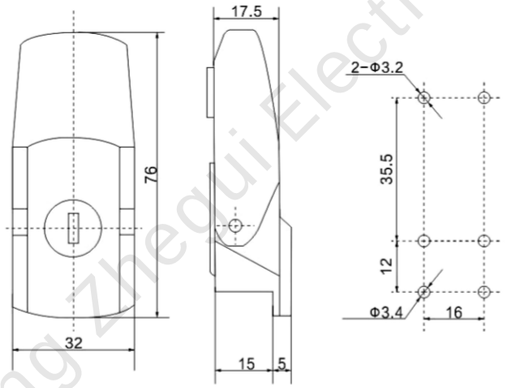

DKS−1大号 (Large size)

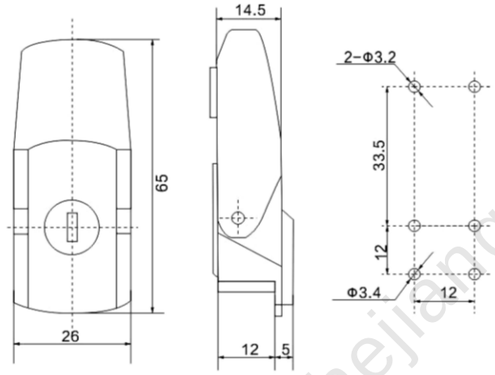

DKS−1小号 (Trumpet)

材质：锌合金基座、翻盖、固定扣、碳钢，不锈钢固定架
表面处理或颜色：纳米喷塑、亚黑色、纳米喷漆、亚光色、表面镀铬，亮白色.
功能说明：搭扣锁

Material: Zinc alloy base, clamshell, fixing buckle, carbon steel,
stainless steel fixing frame.
Surface treatment or color: nano spray, subblack, nano spray paint, matte color,
surface chrome, bright white.
Function description: Buckle lock.

HX01

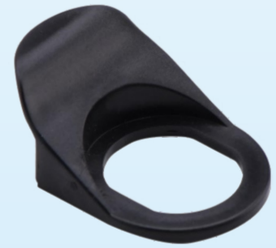

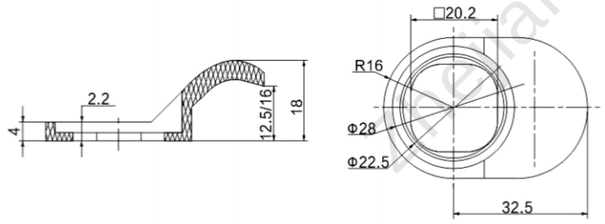

主材料：阻燃尼龙，黑色
Main material: Flame retardant nylon, black.

HX001



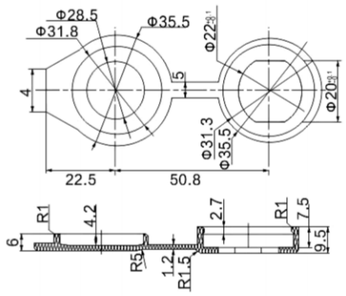

主材料：热塑性橡胶黑色
Main material: thermoplastic rubber black.

HX01-1/2/3

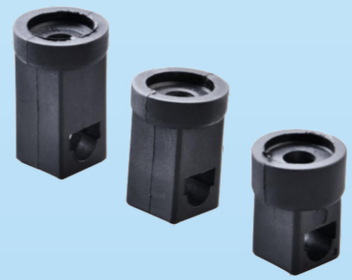

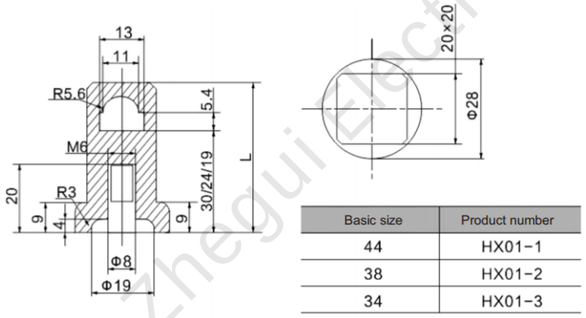

Basic size	Product number
44	HX01−1
38	HX01−2
34	HX01−3

主材料：阻燃尼龙，黑色
Main material: Flame retardant nylon, black.

Zhejiang Zhegui Electric Co., Ltd.