GIANT ELECTRIC



Product Summary

Zhejiang Zhegui Electric Co.,Ltd

Wechat/WhatsApp: +86 13353325100

Qiligang Industrial Zone, Liushi Town,
Yueqing City, Wenzhou City, Zhejiang Province

Mobile: +86 13353325100

Email: emmali@giantele.com

ZHEGUI reserve the right to make technical changes or modify the contens of this documentwithout prior notice.Al the agreed particulars shall prevail. All Right Reserved

© Zhejiang ZHEGUI Electric Co., Ltd. All Right Reserved

Good faith and win-win

QUALITY INNOVATION

Zhegui Electric Co., Ltd

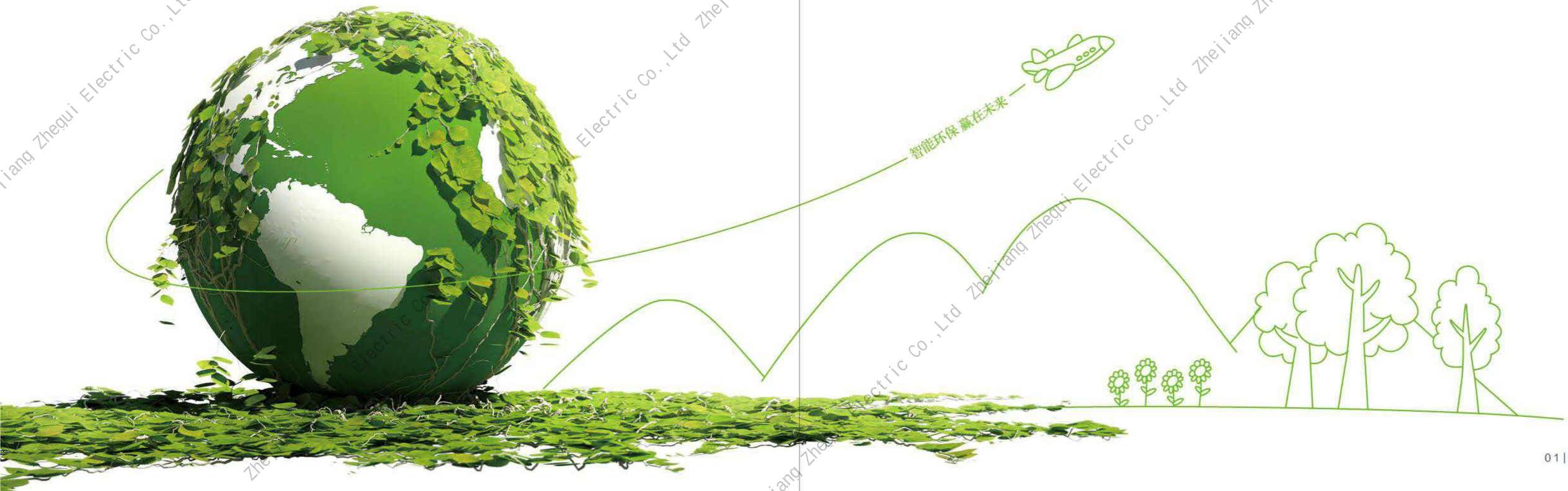

Zhejiang Zhegui Electric Co.,Ltd









GIANT ELECTRIC

Company Profiles

Zhejiang Zhegui Electric Co., Ltd was established in 2013. Our company has nearly 60 million fixed assets, covering 20000 square meters. Our products with its excellent brand reputation and quality throughout the country large and medium-sized city, and are exported to more than 50+ countries and regions.

We specialize in R&D production of low&medium voltage power distribution equipment and electrical accessories, etc. We provide all kinds of technical support for customers including OEM manufacturing capabilities. And provide solutions for various power systems. It's honorable for Zhegui to share your progress, brilliance, and success!











To be Your Partner For Sustainability and Efficiency

We Provide solutions for various power systems by integrating advanced process and energy technologies to realize the full efficiency and sustainability opportunities for your business. Our integrated solutions are built with safety and reliability for buildings, infrastructure and industries. We provide safe and reliable products and high-quality after-sales service, adhere to the production philosophy of product quality first, customer first, your satisfaction is our motivation.

Customization

Support OEM&ODM, any specification according to your requirement.

Warranty

Each product comes with a qualified inspection certificate and a 12-24 month quality assurance

Rich Experience

13+ years of professional manufacturing e xperience, products are exported to various countries

Reasonable prices

Match the most suitable solution according to your budget expenditure.

Strong R&D Ability

Professional engineering team develop products that meet the requirement fo customers.

Professional Qualifications

Full range of product certifications, up to 50+, include CE, CCC, Test Report, CQC etc.....

Zhejiang Zhegui Electric Co.,Ltd

INTEGRITY WIN WIN, QUALITY INNOVATION

Certification Trustworthy

Quality management is the wing of the new era... .
Smooth communication, strict quality control, perfect details, pleasant business dealings...
In the new era, in a word, to make every customer can get the most perfect service, this is our consistent spirit of business.
We have been with their own professional and focus, won the praise and support of the industry, but also make the new era company to create a series of good enough to spread.



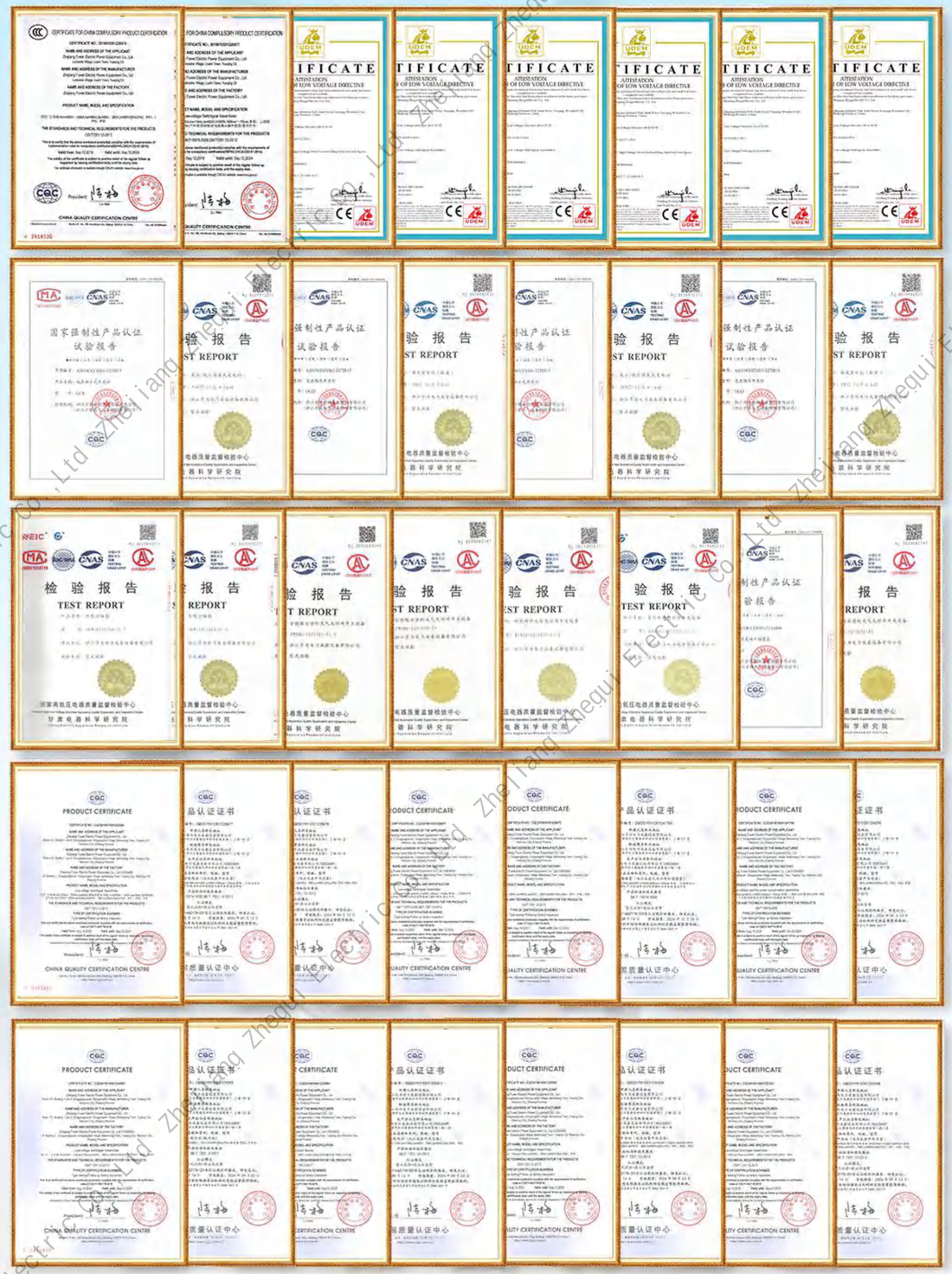

Zhejiang Zhegui Electric Co.,Ltd

RM6

Fully Insulated Inflatable Cabinet

Overview

RM6(XGN□)-12 fully insulated fully enclosed compact switchgear, which can realize functions of control, protection, measurement, monitoring, communication, etc. is especially suitable for places with small distribution facility site and high reliability requirements, and places with a relatively harsh natural environment and conditions, such as underground, highland and coastal areas. It is mainly used in areas where land is tight and space is limited, high reliability is required, like industrial and mining enterprises and substations, subways, light rail railways, etc. It combines microprocessor technology, modern network communication technology and new switch manufacturingtechnology to effectively separate and combine load current and short circuit current. The measurement protectioncontrol and communication functions configured inside the device can fully meetthe requirements of the distribution automation system. The conductive parts of the high voltage components such as circuit breakers, three working position switches and load break switches in the main circuit are installed in a sealed cabinet-type stainless steel casing. The biggest feature is that it is not affected by the external environment, and has high reliability and can make the equipment run safely for a long time in places with poor environment; secondly, the size of the high voltage omponent is reduced, the device is miniaturized, and the parts inside the sealed casing are free from corrosion and rust, thereby eliminating the influence. In addition, with high voltage components with stable performance and long electrical life, maintenance-free or less maintenance requirements can be achieved.

Environmental Requirements

1.Ambient air temperature: -40℃~+40℃;
2.Relative air humidity: daily average ≤95%, monthly average ≤90%;
3.Altitude ≤1500m (under standard inflation pressure);
4.Seismic intensity ≤9 class;
5.Places free from fire, explosion, serious contamination, chemical corrosion and severe vibration.



Model Description

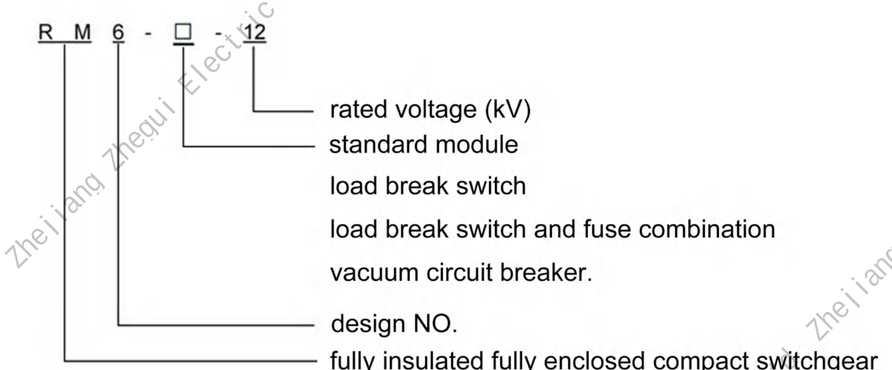

Structural features

Modular design

The switch is divided into fixed module and expandable module group. In the same SF6 insulated air chamber, up to 6 modules can be configured. Switching cabinets with more than 6 modules must be connected with the expansion busbar to realize the semi-module. Structure; full module configuration can also be achieved by using an extended bus between all modules. Through the combination of different functional modules, a simple to complex power distribution scheme can be formed to meet various configuration requirements in the secondary substation and the opening and closing.

Compact structure

Except for the air-insulated metering cabinet, all modules are only 325mm wide and the metering cabinet width is 695mm; the cable joints of all units are the same height to the ground, which is convenient for on-site construction.

Unaffected by the environment

All high-voltage live parts are installed in a sealed stainless steel case. The case is welded with a stainless steel plate and filled with

SF6 gas at a working pressure of 1.4 bar. The degree of protection is IP67. It can be used in places where it is installed in damp, dusty, salt spray, mine, box-type substation and air pollution. Even the fuse compartment has an IP67 rating. The extension busbars are completelyinsulated and shielded to ensure that they are not affected by changes in the external environment.

Highly reliable personal safety

All live parts are enclosed in the SF6 air chamber; the switch has a reliable pressure relief channel, the load and grounding switches are three-position switches, simplifying the interlocking between each other; reliable mechanical interlock between the cable compartment cover and the load switch .

Zheiiang Zhegui Electric Co.,Ltd

GGD

AC Low-yoltage Power Distribution Cabinet

Overview

GGD AC low-voltage power distibution cabinet is applicable to power consumers of power plants, substations, industrial and mmining enterprises and is used for electric eneray conversion, distribution and control of power, lighting and power distribution equipment in power distribution system with AC 50Hz, rated operating voltage of 380V and rated operating current of up to 3,1 50AGGD low-voltaoe power distribution cabinet conforms to IEC61439 Low-voltage Switchoear and Controlaear Assemblies and GB7251 Low-voltage Switchgear and Controlgear Assemblies. Featuring high breaking capadity, good dynamic themmal stability, novel and reasonable structure, Perfect electric scheme , strona series and applicability and high degree of protection, the product. may be used as an upgraded product

Standards

This product shall conform to:
GB7251.1 Low-voltage Switchgear and Controlgear Assebles Part t: Ceneral Aulles
GB7251.12 Low-voltage Switchgear and Contralgear Assemblies Part 2: Power Switchgear and Controlgear Assemblies .
IEC61 439 Low-voltage Switchgear and Controlgear Assemblies



Environmental Requirements

1.Ambient air temperature: -15℃~+40℃ Daily average temperature: ≤35℃ When the actual temperature exceed the range, it should be used by reducing the capacity accordingly.
2.Transport and store temperature: -25℃~+55℃. do not exceed +70℃ in short time.
3.Altitude: ≤2000m
4.Relative humidity: ≤50%, when temperature is +40℃When temperature is low, larger relative humidity is allowed. when it is +20℃, relative humidity can be 90%. Since the temperature change will make out condensation.
5.Installation inclination: ≤5%
6.Applicable in the places without corrosive and flammable gas.
Note: Customized products are available.

Model Description

GGD□-□-□-□

- "D" power supply "F"power generation
- Auxiliary circuit scheme NO
- Main circuit scheme NO.
- Design No.
  1-breaking capacity 15KA
  2-breaking capacity 30KA
  3-breaking capacity 50KA
- Power cabinet
- Electrical elements and wires fixed installation
- Low voltage switchgear

Technical Data

Type	Rated voltage (V)	Rated current (A)	Rated short-circuit breaking current (kA)	Rated short-circuit withstand current (Is)(IkA)	Rated peak withstand voltage (kA)
GGD1	380	A 1000	15	15	30
	380	B 600(630)	15	15	30
	380	C 400	15	15	30
GGD2	380	A 1500(1600)	30	30	63
	380	B 1000	30	30	63
	380	C 600	30	30	63
GGD3	380	A 3150	50	50	105
	380	B 2500	50	50	105
	380	C 2000	50	50	105

Zhejiang Zhegui Electric Co.,Ltd

GGJ

LV Reactive Power Compensation Cabinet

Overview

Transmission and distribution system is the sine wave voltage and current waveform of the fixed frequency. When the nonlinear load is like the thyristor rectifier, the frequency converter will generate a large amount ofharmonic curent, causina the voltaoe and current distortion.

Capacitor and power grid can fom a parallel resonant circuit, and the hamonic current amplification to 20 times as the nomal. The resonant frequency of the parallel resonant dircuit is close to the harmonic frequency in the power network. The harmonic current will cause the further voltaoe distortion, which is why power arid affected by harmonics can not be used for power factor compensation by the conventional capacitor.

When the power grid is in the presence of harmonics, the tuning filter should be used to compensate the power factor, A tuned filter, which is composed of capaditors and reactors in series. can compensate for inactivity without amplification.

Product standards and technical requirements

GB/T 1576-2008



Power factor compensation in the presence of harmonics

The tuned filter design used to the grid which generate harmonics for power factor compensation

Each section of the tuned fiter is composed of a reactor and capacitor in series, and a series of resonant circuit is fomed by the capacitor and reactor, and the resonance frequency is 5 times of the lowest harmonic in the power network.250Hz)The tuning frequency of the resonant circuit, such as the fundamental frequency, is capacitive, for the power grid, the reactive power is higher than the tuning frequency of the fiter is an electric sensibility,

This means that no other including 5 times, 7 times and 11 times of the ordinary harmonic will be amplified, and the filter can also absort a part of Low order harmonic in the power gnid. Different from the conventional capacitor group, each tuned fiter is controlled by an automatic power factor regulator according to the need of no power

Technical parameter

Rated voltage: Ina569A-82A
System voltage: AC380/AC400V
Rated capacity: 87.5-450kvar/cabinet
Resonant frequency: 141Hz and 189Hz, other frequency which to provicded based on the need sfsuch as 204Hz
Installation site: In the house
Temperature range: the lowest -5℃C, the highest +40℃,. 24 hours average mavimum +35 ℃, annual average +25℃
Degree of protection: P30

1. Powerfactor regulator
2. Fuse protector
3. Contactor
4. Peactor;
5. Capacitor
6. Air fitter



Zhejiang Zhegui Electric Co.,Ltd

GCK

Low Voltage Withdrawable Switchgaer

Overview

GCK low voltage draw out switchgear is composed of power distribution center (PC) cabinet and motor control center (MCC), which is suitable for power plant, substation, industrial and mining As an AC 5060hz, the maximum working voltage is 690V and the maximum working current is 3150A, the power users such as enterprises are used as power distribution and motor control The product meets iec439 standard and GB7251 low voltage cabinet, switchgear and control equipment National standard, with high breaking capacity, good dynamic and thermal stability, advanced structure, reasonable structure, practical electrical scheme, series and universality. All kinds of units of rich and rich In line, a cabinet body contains more return, saving land area, beautiful appearance, high green protection, safe curtain, convenient maintenance and other advantages

Environmental Requirements

1. Operating conditions: indoor;
2. Altitude: lt; 2000m;
3. The earthquake intensity is not more than 8 degrees;
4. Upper limit of ambient air temperature: +40℃;
5. Upper limit of average temperature for 24 hours: +35℃;
6.The lower limit of ambient air temperature :-5℃;
7. The relative humidity of the surrounding environment at +40℃ is 50%;
8. No fire, explosion danger, serious pollution and enough to corrode metal
and damage the insulation of gas and other bad places
9. No violent vibration, jolting place.



Model Description

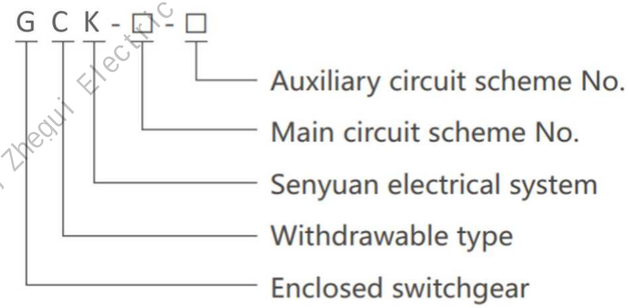

Technical Data

Sr.	Content		Unit	Value
1	Rated Operating Vbltage		V	380/690
2	Rated Insulation Voltage		V	660/1000
3	Rated Frequency		Hz	50
4	Main Bus-Bar	Rated Current	A	<3150
		Rated Short-time Withstand Current(Is)	kA	<80
		Rated Peak Withstand Current	kA	<143
5	Distribution Bus	Rated Current	A	<1000
		Rated Short-time Withstand Current(Is)	kA	<50
		Rated Peak Withstand Current	kA	<105
6	Imin Aux. circuit Frequency Withstand Voltage in Imin		kV	2
7	Rated Impulse Withstand Voltage		kV	8
8	Protect Degree		IP	The IP54 To IP54
9	Electrical Clearance		mm	>10
10	Creepage Distance		mm	>12.5
11	Over-voltage Level		-	III/IV
12	Class of Pollution		-	3

Zheiiang Zhegui Electric Co.,Ltd

GCS

Low Voltage Withdrawable Switchgaer

Overview

The device is used in power conversion, distribution and control of power distribution and motor control centers, capacitor compensation of LV power distribution system of power plants, substations, petrochemical departments, factories and mines, high-rise building

The device, when used in low-voltage power control center and the motor control center of the large capacity power plant, largescale petrochemical industries, can meet the special need to interface with the computers.

The device, depending on the requirements of users and design departments, can meet the special requirements to increase power capacity and interface with the computers.

The new type draw-out switchgear, designed depending on the principle of being safe, economic, reasonable and reliable, has such features as high breaking and making capacity, good dynamic thermal stability, flexible electric solutions, easy combination, strong practicality, novel structures and hiah dearee of protection and is the latest updated product. The device is in conformity with the standards of IEC439-1 "LV Complete Set of Switchgears and Control-gears", GB7251 "LV Complete Set of Switchgears". JB/T9661-1999 "LV Complete Set of Withdrawable Switchgears" and so on.



Environmental Requirements

1.The ambient air temperature shall not be higher than +40℃ and not be lower than -5℃, and the average temperature within 24h shall not be higher than +35 ℃.
2.If the temperature exceeds the above value, the device shall run with reduced capacity. When the air is clean, the relative humidity shall not exceed 50% at +40℃, and it may be higher at lower temperature, for example 90% at+20℃.
3.The impact of condensation resulting from temperature variation should be considered.
4.The inclination of equipment shall not exceed 5° at installation. The height above sea level in the place of use may not exceed 2,000m The medium shall be free from explosive hazard and not contain the gas and conducting dust which may corrode metals anc destroy the insulation.
5.The user's special requirements may be soved through consultation with the Company.

Usage

This device is widely applied to the power distribution systems of power plants, petroleum, chemical, metallurgical, textile and high-rise buildino industries. In the large power plants, petrochemical systems, etc. with high automation degree and with interface with computer, the device may serve as a low-voltage power distribution device used power distribution, motor centralized control and reactive power compensation of power generation and supply systems with AC three-phase frequency of 50 (60) Hz, rated operating voltage of 380V (400) (660), and rated current of 4,000A and below.

Model Description

G C S - □ - □

- Auxiliary circuit scheme No.
- Main circuit scheme No.
- Senyuan electrical system
- Withdrawable type
- Enclosed switchgear

Zheiiang Zhegui Electric Co.,Ltd

MNS

Low-voltage Draw-out Switchgear

Overview

MNS is a modular, multifunctional low-voltage distribution cabinet.It is applied to all low-voltage systems requiring high reliability field connection in the fields of metallurgy, petroleum,chemical, industrial and mining enterprises and infrastructure, etc. : distribution and motor control systems.MNS adopts a cabinet structure with a high degree of flexibility.According to your needs or different occasions of use, the cabinet can be installed in a variety of models and specifications of components;According to different electrical equipment, multiple types of feeding units can be installed in the same column cabinet or the same cabinet. For example: feed circuit and motor control circuit can be mixed together.

MNS is a full range of low voltage switchgear to meet your full range of requirements.Suitable for all low pressure systems up to 4000A.MNS can provide a high level of reliability and security.

The humanized design strengthens the necessary protection for personal and equipment safety.MNS is a fully assembled structure, and its unique profile structure and connection mode as well as the compatibility of variouscomponents can meet the requirements of harsh construction period and power supply continuity.

Executive standard: IEC439. GB7251.1O



Environmental Requirements

1. Ambient air temperature: from-5℃C to +40℃, and average temperature shall be not higher than +35℃ in 24h
2. Atmospheric conditions, relative humidity shall not be over 50% when the highest temperature is at +40℃. But higher humidity is allowed when temperature is lower, foe instance, humidity can be 90% when +20℃. It shall be taken into consideration that changes of temperature can accidentally cause condensation
3. Absolute elevation shall be not higher than 2000m. (Otherwise, the capacity shall be reduced)
4. The temperatures for transportation and storage of this device is from +25℃ to +55℃, in a short time (no longer than 24h) the limiting temperature can reach +70℃, in that case, unrecoverable damages will not occur on the device. In case the above service conditions are not satisfied, the user shall consult with the manufacturer.
5. If this device is used in offshore oil platforms or nuclear stations, another technical agreement shall be signed.

Usage

MNS LV withdrawable switchgears (here-in-after referred to switchgears), suitable for the power control and distribution system with AC 50-60Hz, rated working voltage up to 660V. are divided into 2 kinds ,they are: standard type and improved type, which are composed of PC cabinet and MCC cabinet. The switchgears are used for electric power control and distribution of motor control and lighting in power plants, substations and industrial and mining enterprises.

The switchgears can not only be used on land, but also used in offshore oil platforms and nuclear power stations after special treatments

Model Description

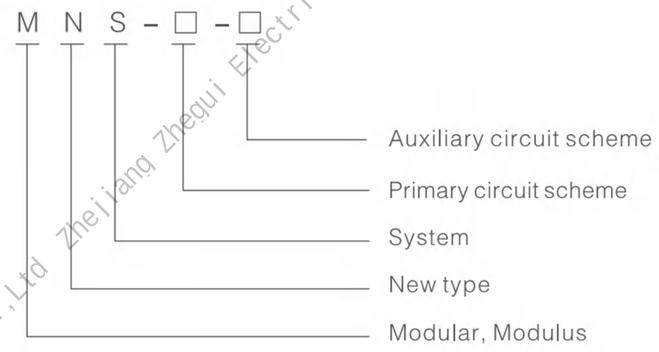

Zhejiang Zhegui Electric Co.,Ltd

GZDW

DC Power Supply Panel

Overview

DC panel used in large, middle and small power generating plant or substation, output DC source for the ON/OFF operation, relay protection, auto control, lighting tor high voltage switches at normal status or fault status. The reliability of DC panel is what other power source device can't substitute always. It can meet with such high reliability for the auxiliary power source in substation and power plant.

This series of DC panel has such features as: small size, high efficiency, high technical index, module design, n+1 heat redundancy backup, high reliability, module design (adopted the world latest advanced technology of "Resonant voltage dual loop control resonant switch power source"four remoteoperations, standard RS-485 and RS232 interfaces provided tor automation, also the other performances excel over the traditional power source of similar use.

Complied standards: GB/T 19826-2005 General specification and safety requirements for DC power supply equipment of power proiects. JB/T 5777-4-2000 The general specification and safety requirements for D.C power supply equipment of power system. JB/ 8456-1996 Low-voltage D.C switchgear and controlgear assemblies. DL/T 459-2000 Specifications of D.C supply cabinet in power system. DL/T 504195 Technical code for the design of fossil-fired power plant inner communication.

Environmental Requirements

•AC input
Input Voltage: AC 380V ± 20%
Frequency: 50 Hz ± 2%
•DC output
Output voltage: 110V or 220V
•Regulation accuracy: +0.5%
•Current regulator accuracy: +1%
•Ripple factor: s 0.5%
•And not all mobility: +3%
•Control bus:5A, BA, 10A, 12A, 15A, 20A, 30A, 40A, 50A、80A, 100A.
•Closing bus : 120A, 240A, 480A, 720A.



•Battery capacity
Lead-acid batteries : 7AH, 17AH, 40AH, 65AH, 100AH, 200AH, 300AH, 400AH. .500AH, 600AH, 800AH, 1000AH, 1500AH, 2000AH, 3000AH.

•Nickel-cadmium batteries : 10AH, 20AH, 40AH, 65AH, 100AH, 200AH, 300AH.400AH, 500AH.
•Degree of protection: IP30
•Input Power Factor: ≥0.93
•Charging efficiency: ≥95%
•Maximum noise (dB): ≤ 40
•Dielectric Strength: AC 2500V/1 min

Model Description

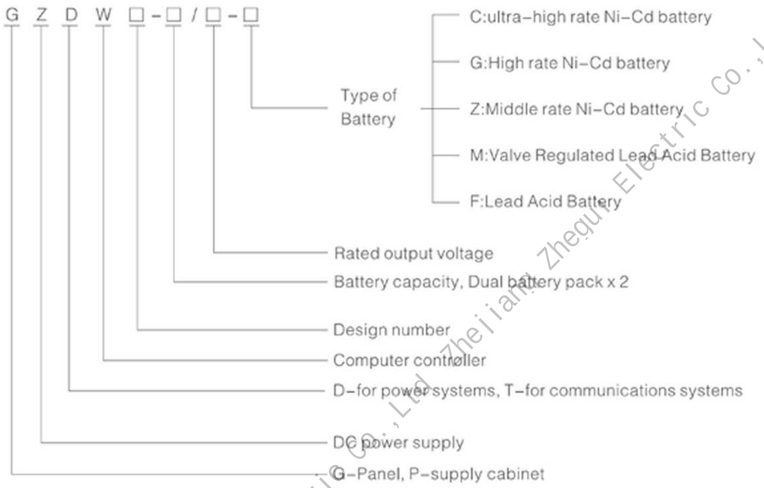

Zheiiang Zhegui Electric Co.,Ltd Zheiiang Zhegui Electric Co.,Ltd Zheiiang Zhegui Electric Co.,Ltd

KYN28-12

Armoured Open AC Metal-enclosed Switchgear

Overview

The KYN2BA-12 indoor AC meta-dad withodrawable switchgear (heranafter refered to as switchgaar) complete set of power distrbuion devces of 3.6ky- 12wV three-phase AC 50Hz single bua or shale bus sectiona avatem. The switchoear la manl uged n power dlarts, smal- and medium-szed power generators. industral and minina enterorises, and secondary substations of power avstem for power recaina, power transmisaon and startn of lame-azed hicth-oltage motor in oder t imbment control, protection, and monitar. The switchgear comples with IE062271 and GB3906 standards and comes out with a variety of protection funcions, including preventing pulling or pushing crcut beaker handcart in load mode, preverting turning onvoff the drcut breaker by mistake, preventing tuming on the clicuit breaker when the gounding switch is inON position, peventind ertering the energized cublice by mistake, and preventing tuming on the irntertock function of the grourding switch by mistake in eperized state. The switchoear can be used in coniunction with the VD4 drcuit beaker ofthe ARB omnan VS1 cir it hreeker isolation handcart, and yotaoe tranaformer, It s realy a hith-performance power distribution devioe.



Model Description

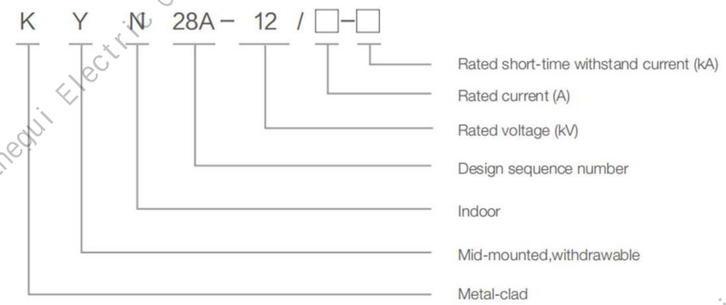

Environmental Requirements

Normal Operation Conditions

1. Altitude s 1000m
2. Ambient temperature: -10C-+40C temperature can be as low as 25℃C durina transportation and storage).
3. Relative humidity: daily relative humidity s 95% on average: monthly relative humidity s 90% on average
4. Seismic scale of earthquake s8
5. The switchgear is applicable to category III contaminated environment.

Special Operation Conditions

If the switchger will be usedin conditions that exceed the nomal envignmental condtions, uses shal negctate with the manufacturer.

Zheiiang Zhegui Electric Co.,Ltd Zheiiang Zhegui Electric Co.,Ltd Zheiiang Zhegui Electric Co.,Ltd

XGN15-12

Unit AC Metal-enclosed RMU switchgear

Overview

XGN15-12 Fixed AC metal-enclosed switchgear (hereinafter referred to as "switchgear"), used as an indoor complete distribution equipment for receiving and distributing electric energy in a three-phase AC 50/60Hz system with rated voltage 3.6-12kV. It has the function of circuit protection and detection. Its bus system is single bus and single bus with bypass bus, and can be derived from, double bus structure. The switchgear conforms to the requirements of national standards GB3906 and DL/T404, and has a complete set of reliable performance, complete functions, simple structure, convenient operation of the mechanical anti-error locking device, simple and effective to meet the "five" locking function requirements proposed by the two.

Environmental Requirements

1. Ambient temperature: not higher than + 40 ℃, not lower than - 15 ℃. Within 24 hours, the averageThe temperature should not exceed + 35 ℃.
2. Altitude: no more than 1000m.
3. Relative humidity: the daily average value shall not exceed 95%, and the monthly average value shall not exceed 90%.
4. Seismic intensity: no more than 8 degrees.
5. Water vapor pressure: the daily average value shall not exceed
2.2kpa, and the monthly average value shall not exceed 2.2kpa1.8kPa
6. No fire, explosion, serious pollution, chemical corrosion and violent vibrationIt's a good place.



Model Description



Product features

1. Xgn2-12 switchgear is a metal enclosed box structure, and the cabinet frame is welded by angle steel and copper plate.
2. The cabinet is divided into circuit breaker room, bus room, cable room and relay room, and each room is separated by steel plate.
3. The front and rear doors of the switchgear are installed off the wall and maintained on both sides.
4. There is a pressure relief channel on the top of the switch cabinet. In case of internal arc fault, the pressure and gas can be released from the pressure relief channel to ensure the safety of operators.
5. The switchgear has perfect and mature "mechanical five prevention" and simple and clear operation procedures.
6. ZN28A-12, ZN63A-12, VS1 and other series vacuum circuit breakers are used as the main circuit breaker of the switch cabinet. Other types of circuit breakers can also be equipped as required Ct19 spring operating mechanism.
7. The disconnector adopts gn30-10 rotary disconnector and gn22-10 high current disconnector.

Zheiiang Zhegui Electric Co.,Ltd Zheiiang Zhegui Electric Co.,Ltd Zheiiang Zhegui Electric Co.,Ltd

HXGN

Fixed Metal-enclosed Switchgaer

Overview

HXGN-12 Fixed Metal Closed Switchgear (Hereinafter referred to as "Ring Grid Cabinet")) is a three-phase AC converter with rated voltage of 10kV and rated power of 50/60Hz. It belongs to closed switchgear and is suitable for power distribution system, ring network power supply or double current radiation power supply system in factories, workshops, residential buildings and other places. It plays a role in receiving, distributingand protecting, and is also suitable for box substations.

Environmental Requirements

1. Operating conditions: indoor.
2. Altitude: < 1000m.
3. Seismic intensity: no more than 8 degrees.
4. Pollution level: 11.
5. Ambient temperature: - 15 ℃ - + 40 ℃
6. Relative humidity: daily maximum average < 95%, monthly maximum average = 90%.
7. There is no danger of fire, explosion, serious pollution and corrosion of metalAnd damaging the insulation of the gas and other bad places.
8. There is no place with violent vibration, turbulence and vertical gradient less than 80.



Model Description

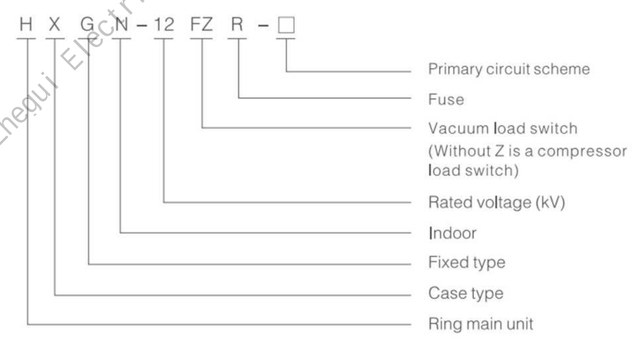

Structural features

1. The switch cabinet body is assembled with 8MF section steel and separated into bus room, switch cable room and instrument room with metal partition.
2. The cabinet is of assembled structure, stable and reliable, and easy to extend and combine.
3. The load switch has a static contact insulation cover, which can effectively prevent arc short circuit accident in the cabinet and ensure the safe operation of the equipment.
4. The load switch has a unique metal valve and grounding structure. After the load switch is opened, the valve will automatically close and separate the fracture to ensure that there is no electricity in the switch cable room, Realize the purpose of separating from the live main bus compartment.
5. The load switch is usually side mounted, and the three phases are arranged in front and back, so the cabinet is small in volume and the floor area is reduced.
6. This product uses the compressed air load switch as the main component, and uses the compressed air principle to extinguish the arc, with stable and reliable breaking performance.
7. The load switch, grounding switch and fuse are assembled as a whole, with reliable locking device, meeting the requirements of "five prevention" function.
8. In order to optimize the operation of ring main unit, electric mechanism, communication module and other equipment can be installed to ensure the remote control and automatic management of power grid.

Zheiiang Zhegui Electric Co.,Ltd Zheiiang Zhegui Electric Co.,Ltd Zheiiang Zhegui Electric Co.,Ltd

XL-21

Low Voltage Power Cabinet

Overview

XL-21 LV closed type power panel can be used in AC 500V or lower system of three-phase three-wire, three-phase four-wire, three-phase five-wire for electricity-generating and mine enterprises, aso for the purpose of power, lighting, distribution. XL-21 ype low voltage power panel has flexible distribution scheme, conven ient combination, good practical performance, new structure and etc.

Environmental Requirements

1. Altitude: <2000m;
2. The indoor environment shall be non-ash, non-corrosion gas, and rainwater-proof;
3. Ambient temperature:-25℃-+40℃, the measured average temp. in 24 hours: 35℃; the temp. under storage and transportation condition:-25℃-+55℃, the temp. in short time <70℃;
4. Relative humidity under the highest temp. of 40℃: <50%;
5. No vibration and the oblique mounting angle: <5℃.



Model Description

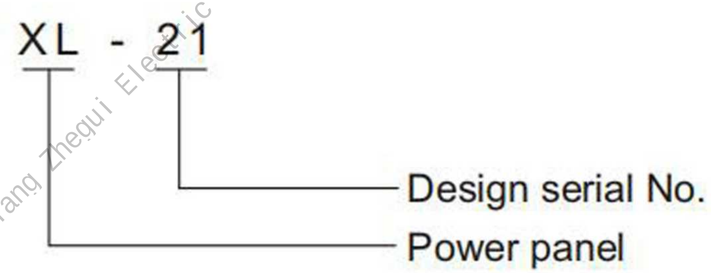

Structural features

1. Main electrical performance shall completely comply with regulations of IEC60439-1:1992,GB7251.1-1997.
2. The auxiliary circuit has functions of local/remote, remote, automatic control and in-site/remo te, remote control switch. The contactor can adopt DC protection.
3. Receiving main switch has optional protection of instart trip and pyromagnetic trip. Can cancel instant protection for matching next class main-switch, avoid skip-class tripping, and has functions of motor/manual operation and automatic switch.
4. Main switch of fe eding circuit has protection of instant trip and pyromagnetic trip. Can add fault protection if customer required.
5. The motor control circuit has protection of short-circuit instant, overload, undervoltage release and phase-break.
6. Ammeter and voltage meter for incoming circuit.

Zhejiang Zhegui Electric Co.,Ltd

JP Box

Integrated Distribution Box

Overview

SVS outdoor low voltage reactive power automatic compensation box suitable for urban and rural power distribution transfome low voltage side, Function of distribution, control power, protection equipment and so on . At the same time can be monitored in eal-time, display, record with operating data and realize remote data transmission, realize low voltage reactive power automatic compensation, can effectively improve the quality of power supply, to provide the power supply reliability, reduce reactive powet loss, reduce power loss rateSVS outdoor low voltage reactive power automatic compensation box running data to achieve with GPRS real-time communication and can be linked to the original background system application

Product standards and technical requirements

GBIT 15576-2008



Working Conditions

a.The ambient air humidity is not higher than +45℃, and no less than-10℃ , and the daily average temperature is not higher than +35℃

b.Outdoor installation, with the ability to work in All day outdoor environment

c The air relative humidity when it is+25 ℃ less than 95%, should be taken into account due to changes in the environment may occasionally produce moderate condensation.

d.The surrounding medium is not explosive and flammable and is not enough to damaoe the insulation and corrosion of metal gas no electric quste. Installation site without severe vibration and bumps, according to the inclination of not more than 5°

f. The use of voltage fluctuation range is not more than the rated working voltage of ±10%, the limit voltage is not more than +20% of the rated working voltage, when the use of conditions or other requirements, by negotiated with manufacturer and user.



1) Rated operational voltage: AC380V 50Hz
2) Rated insulation voltage: AC6900
3) Clearance: 210mm
4) Creepage distance: 214mm
5) Compensation capacity: 146-6kvar
6) Main switch rated current: 630-100A
7) Degree of Protection: IP44
8) Loop number, according to customer requirements configuration, single-phase, three-phase combined compensation

Zheiiang Zhegui Electric Co.,Ltd

JXF

Low Voltage Distribution Box

Overview

It suits for operating in the circuit of AC 50Hz, rated operating voltage 500V and below, in some special cases, the protection grade can reach up to IP55, the top and bottom of the panel will provide knockout holes, if multiple pipes are used for incoming lines, opening plate can be prepared, maxi rated current up to 400A, especially suitable for usage in metering and control box of mining field, hotel, living buildings and etc. Comply with GB7251.12-2013 Low voltage switchgear and controlgear, IEC60439-2:2011 Low voltage switchgear and controlgear standard.

Environmental Requirements

1.Ambient air temperature: -25℃-+40℃;
2.Humidity: <50%(at +40℃)
3.Altitude: < 2500m;
4.Rated operating voltage: 230V 400V
5.Rated operating voltage: 400A
6.Rated short-circuit breaking capacity: 80kA
7.Degree of protection: IP55



Model Description

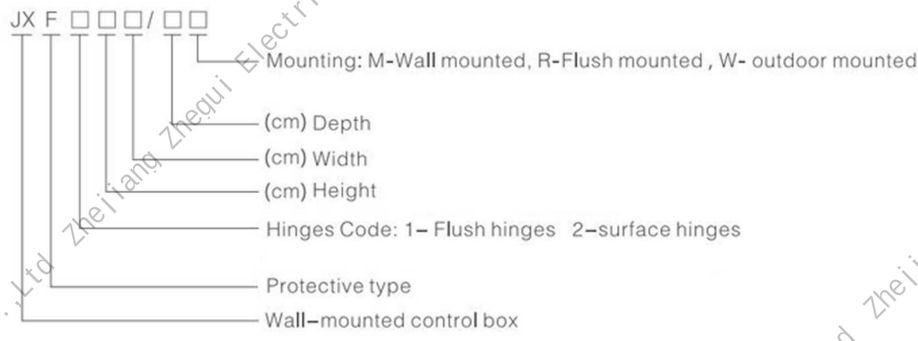

Structural features

Type	Specifications HxWxD(mm)	Type	Specifications HxWxD(mm)
JXF1-2525/14	250 x 250 x 140	JXF1-6040/23	600 x 400 x 230
JXF1-3025/14	300 x 350 x 140	JXF1-6050/14	600 x 500 x 140
JXF1-3025/18	300 x 350 x 180	JXF1-6050/20	600 x 500 x 200
JXF1-3030/14	300x300x140	JXF1-6050/23	600 x 500 x 230
JXF1-3030/20	300 x 300 x 200	JXF1-7050/16	700 x 500 x 160
JXF1-4030/14	400 x 300 x 140	JXF1-7050/20	700 x 500 x 200
JXF1-4030/20	400 x 300 x 200	JXF1-7050/25	700x500x250
JXF1-5040/14	500 x 400 x 140	JXF1-8060/20	800 x 600 x 200
JXF1-5040/20	500 x 400 x 200	JXF1-8060/25	800x600x250
JXF1-5040/23	500 x 400 x 230	JXF1-10080/20	1000x800x200
JXF1-6040/14	600 x 400 x 140	JXF1-10080/25	1000x800x250
JXF1-6040/20	600x400x200	JXF1-10080/30	1000x800x300

Zhejiang Zhegui Electric Co.,Ltd

SC(B) 9/10

Dry-type Power Transformer

Structural Features

1.Iron core
Made up of high quality cold rolled silicon steel sheet that is for electric engineering
2.Low voltage winding
Made up of a whole copper foil coi
3.High voltage winding
Made up of sectional type vacuum casting double glass-fiber covered coils
4.Low voltage terminal
5.High voltage terminal
Variable wiring mode, which is convenient for installation
6.Resilient pad
Avoid mechanical resonance, and reduce noise
7.Clamp and trolley
The wheel of trolley can rotates to 90°
It is convenient for vertical and horizontal movement.
8.Packing type resin insulation
With advantages of damp proof, anti-damp and hot, flame-retardant, and self-extinguish.

Environmental Requirements

1.Ambient air temperature:
Maximum air temperature: +40℃
Minimum air temperature:-15℃ (Under a special process, up to-45 ℃);
2.Altitude: < 2500m(Under a special process, up to 4000m);
3.Installation environment inclination of installation lace<3 .no obvious dirt and corrosive or flammable gas.
4.Notes: If the operating conditions exceed the normal conditions, please contact our technical department.



Model Description

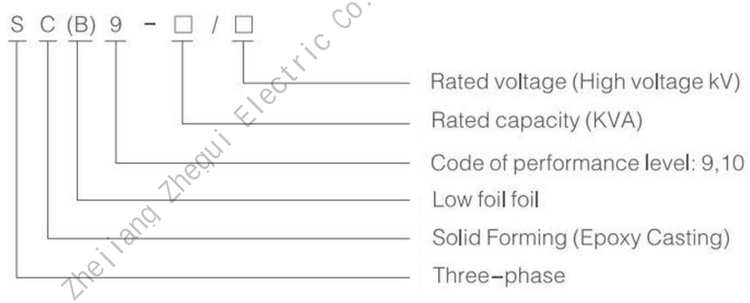

Technical Data

(kVA) Rated capacity	Voltage combination			Connection symbol	Short circuit voltage (%)	Loss(kW)		No-Load current(%)	Weight (kg)	Dimensions LxBxH(mm)	Gauge Vertical x horizontal(mm)	Shell Dimensions LxBxH(mm)
	H.V (kV)	Tapping range	L.V (kV)			No-load	120°C Load					
30	11 10.5 10 6.3 6	±2x2.5%	0.4	Yyno Dyn11	4	0.18	0.71	2.20	275	800x460x739	400x400	1100x900x1100
50						0.25	1.00	2.10	360	840x460x769	400x400	1200x900x1100
80						0.33	1.38	1.80	475	910x460x839	400x400	1200x920x1200
100						0.36	1.57	1.60	570	950x820x896	550x760	1300x1050x1250
125						0.42	1.85	1.50	625	950x820x926	550x760	1300x1050x1250
160						0.49	2.13	1.40	755	1020x880x916	550x760	1300x1250x1300
200						0.58	2.53	1.35	820	1030x880x966	550x820	1300x1250x1300
250						0.66	2.76	1.30	990	1050x880x1011	550x820	1350x1250x1350
315						0.78	3.47	1.20	1085	1050x880x1035	660x820	1400x1270x1400
400						0.98	3.99	1.10	1305	1110x970x1111	550x820	1500x1200x1450
500						1.16	4.88	1.10	1425	1110x970x1141	660x910	1500x1200x1500
630					6.0	1.34	5.88	1.00	1590	1280x1120x1096	660x910	1650x1350x1500
800						1.52	6.96	0.90	1900	1320x1170x1176	820x1110	1700x1400x1550
1000						1.77	8.13	0.85	2260	1370x1170x1286	820x1110	1750x1400x1650
1250						2.09	9.69	0.80	2780	1420x1170x1446	820x1110	1800x1400x1800
1600						2.45	11.73	0.75	3355	1440x1140x1607	820x1070	1800x1450x2000
2000						3.05	14.45	0.70	3865	1580x1140x1690	820x1070	1900x1500x2050
2500						3.60	17.17	0.65	4720	1620x1140x1735	1070x1070	2000x1550x2200

Zhejiang Zhegui Electric Co.,Ltd

S9/S10 (10KV)

Oil Immersed Transformer

Overview

This kind of product is applied to power system of three-phase, 50Hz 60Hz as well as 35kV and below, it is the main transformer equipment of medium and small-sized transformer substation, supplies power distribution, power and illurmination for the industry and agriculture. The company introduces in domestic and overseas advanced technique, adopts the latest material and optimizes design, which enables the product structure more reasonable, and greatly improves the product electric strength, mechanical strength and heat-sinking capability. S9 series product has passed the short-circuit test prepared by Wuhan High Voltage Research Institute and also the test prepared by National Center for Quality Supervision & Test of Transformer

Environmental Requirements

1.Ambient air temperature:
Maximum air temperature: +40℃.
Minimum air temperature:-15℃ (Under a special process, up to -45 ℃C):
2.Altitude: s 2500m(Under a special process, up to 4000m):
3.Installation environment inclination of installation lace<3 no obvious dirt and corrosive or flammable gas
4.Notes: If the operating conditions exceed the normal conditions, please contact our technical department.



Model Description

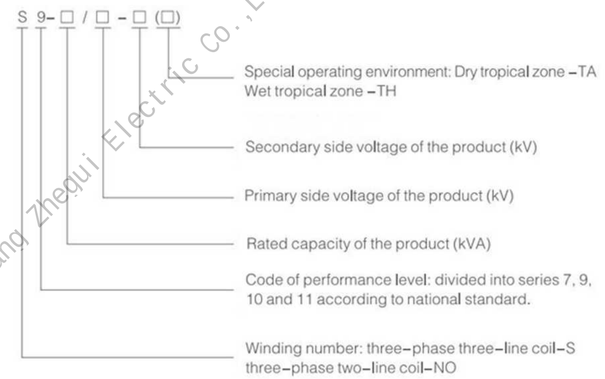

Structural Features

1.Iron core
The iron core is made of high quality cold rolled silicon steel sheet, adopts the kinds of types like full-bias multi-step seam, no punched hole, winding iron core, etc., besides, both stainless steel stay plate and epoxy glass belt are for clamping it.
2.Coil High
quality enameled wire that is made of oxygen free copper or paper wrapped flat copper wire is used as conductor, the coils is provided kinds of types such as drum type, spiral type,improved spiral tvpe. continuous type and interleaved tvpe.
3.Oil tank
The oil tank is of barrel type or shield type, the heat-sinking element is provided with corrugated plate or plated radiator
The transformer has not been equipped with trolley, but there is a base that accords with nationa standard rail gauge welded at the bottom of box for your convenience.
4.Safety protection device
According to national standard and users' reauirements, the transformer mav be eguipped with following safety protection devices: pressure relief valve, gas relay, signal thermometer, oil purifier, oi conservator, oil samplina valve, etc.

Zhejiang Zhegui Electric Co.,Ltd

ZW32-12

Outdoor Medium Voltage VCB

Overview

ZW32-12 type outdoor H.V. vacuum circuit breaker is the outdoor distribution equipment with rated voltage 12KV, three phase AC 50Hz. It is used in substation and industrial and mining enterprises distribution system for protecting and controlling use. It is also used in rural power grid places with frequent operation for breaking and closing the load current and over load current and short circuit current of power system.

The out insulation of the vacuum interrupter adopt silicone rubber casing, with longer life, higher reliability, good weather resistance, convenient for transportation, good rating. The operating mechanism adopt miniaturization, high reliable spring operation mechanism, has the advantages of simple structure, mechanical life up to 10000 times.This circuit breaker and controller can form a complete set as recloser, realize remote control, telemetry, remote communication, remote adjustment four remote function.Product features: no combustion and explosion hazards, maintenance free, small size, light weight (less than 100kg), long service life (million), safety and reliability, simple operation, convenient maintenance and installation.

The use of environmental conditions

1.The environment temperature: upper limit +40℃, lower limit -30℃
2.Altitude ≤ 2000 meters
3.Wind pressure: no more than 700Pa (corresponding to the wind speed 34m/s)
4.Earthquake intensity: do not exceed 8 degree
5.Pollution grade: III class
6.Maximum daily temperature: less than 25℃.

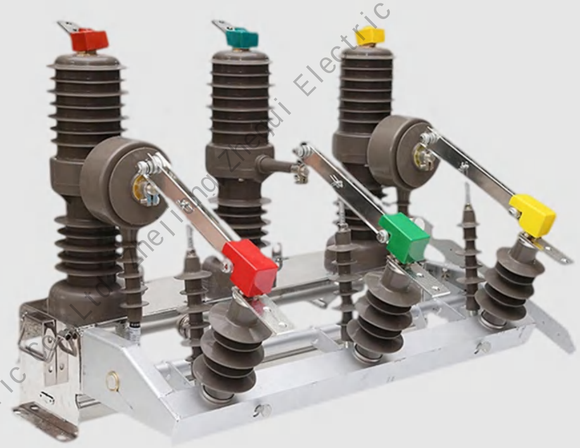

Model Description

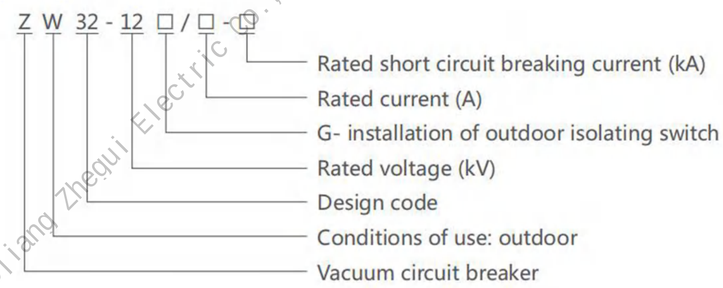

Main technical parameters

Item		Unit	Parameter
Voltage, current parameters			
Rated voltage		kV	12
Rated short time power frequency withstand voltage (1min)		kV	42
Rated lightning impulse withstand voltage (peak)		kV	75
Rated frequency		Hz	50/60
Rated current		A	630 / 1250
Rated short-circuit breaking current		kA	20
Rated short-time withstand current (RMS)		kA	20
Rated peak withstand current		kA	50
Rated short-circuit closing current		kA	50
Rated single/back-to-back capacitor bank breaking current		A	630/400
Rated short-circuit current duration		S	4
Rated short-circuit current breaking times		times	50
The main circuit resista nee		μΩ	≤80(140)
Rated operational voltage			≦220
Mechanical life		times	10000
The overcurrent regulating ☆		A	I~10
Quick-break current ☆		A	6~20
The delay time ☆		ms	40-850
Remote control distanee ☆		m	>30
Reclose time ☆		times	0~3
Rated operating sequenee ☆			O-0.3s-CO-180s-CO
CT※	Ratio	A	0/5
	Capacity	VA	15
The output voltage※		A	AC220
The output capacity※		W	600
The overcurrent regulating※		A	I~10
The delay time※		ms	40-850
Remote control distance ※		m	30

Zhejiang Zhegui Electric Co.,Ltd

ZW20-12F

Column Medium Voltage intelligent VCB

Overview

ZW20-12 outdoor AC HV vacuum boundary circuit breaker (hereinafter referred to as the boundary circuitbreaker) is one of our new products. Boundary circuit breaker is a multifunctional intelligent device with the function of vacuum breaker, vacuum load switch, recloser, sectionalizer four switches. The main configuration consists of vacuum breaker, CH-40 controller, external voltage transformer (Note: distribution automation line ring network available in bilateral PT) three parts. Products are widely used in 10kV, 13kV city, rural power grid space ring network for disconnecting switch, contact switch, automatic switch device which can implement the ring deployment line load. It can be used as boundary switch (commonly known as watchdog) in the branch line of power supply, used as reclosers and sectionalizers in feed overhead distribution network. Boundary circuit breaker with remotemanagement pattern, protection and control functions and communicationfunctions. Reliable detection in judgment, mA level zero sequence current and short circuit current between phases, realize the automatic removal of single-phase grounding fault and phase to phase short circuit fault.The main switch is vacuum arc and insulation adopts SF6, N2 mixed gas.

The case introducting of Japan, Germany, French gas sealing, explosion proof, insulation system technology, the overall excellent sealing performance. Inside is filled with SF6, N2 mixed gas which does not leak, not affected by the external environment. The spring operating mechanism with miniaturization and performance optimization design, action reliability is much higher than the traditional spring mechanism.



Model Description

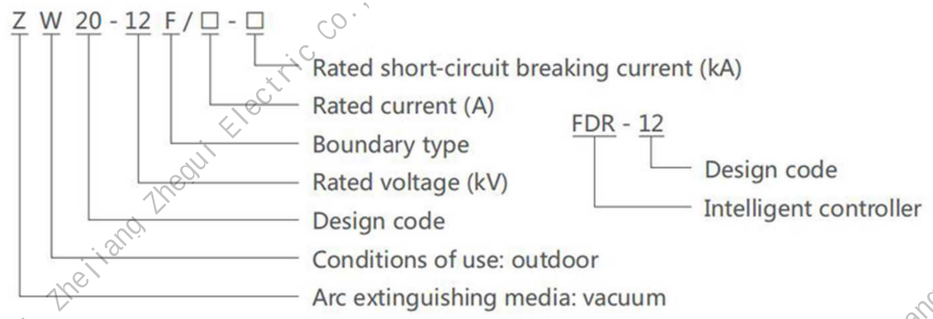

The use of environmental conditions

1.Altitude≤2000 meters
2.The environment temperature: -30℃~+55℃ outdoor; the highest annual average temperature 20 ℃, the highest daily average temperature 30 ℃;
3.Relative humidity: 95% (25℃)
4.Seismic capacity: horizontal ground acceleration 0.3g, vertical ground acceleration 0.15g, at the same time duration of three sine waves, a safety factor of 1.67
5.Earthquake intensity: 7 degrees
6.The maximum daily temperature difference: 25 ℃
7.The intensity of sunshine (wind speed 0.5m/s): 0.1W/cm²
8.The maximum wind speed: 34m/s
9.The maximum ice thickness: 10mm
10.Installation position: outdoor, the 10kV overhead line responsibility demarcation point
11.Grounding: neutral non grounding, arc suppression coil grounding and low resistance grounding

Zheiiang Zhegui Electric Co.,Ltd

VS1-12C

Intdoor Medium Voltage VCB

Overview

ZN63C-12 (VS1-12C) type indoor side installed high voltage vacuum circuit breaker is indoor high voltage switchgear, is suitable for three-phase power system with the rated voltage 12kV, frequency 50Hz, used as a protective and control equipment, due to the special advantages of vacuum circuit breaker, particularly applicable to frequent operation under the rated current, or multiple breaking short circuit current location. ZN63C-12 (VS1-12C) type indoor side installed high voltage vacuum circuit breaker adapts fixed installation, mainly used for fixed type switch cabinet, the circuit breaker can be used separately, but also can be used for ring network power supply, box type substation or various non-standard power supply system.

Environmental Requirements

1.The environment temperature: upper limit +40℃, lower limit -1
(Allow storage at -30℃)
2.Altitude: no more than 2000m;
3.Relative humidity: daily average value is not greater than 95%
monthly average is not greater than 90%;
4.Saturated steam pressure: daily average value is not high
er than 2.2×10-3 Mpa,
5.monthly average is not higher than 1.8×10-3 Mpa;
6.Earthquake intensity does not exceed 8 degrees;
7.No fire, explosion, pollution, chemical
corrosion and severe vibration place.



Main technical parameters

Item	Unit	Parameter		
Parameters of voltage, current, life				
Rated voltage	kV	12		
Rated short time power frequency withstand voltage (lmin)	kV	42		
Rated lightning impulse withstand voltage (peak)	kV	75		
Rated frequency	Hz	50		
Rated current	A	630	630, 1250	1250, 1600
Rated short-circuit breaking current	kA	20	25	31.5
Rated short-time withstand current(RMS)	kA	20	25	31.5
Rated short-circuit closing current	kA	50	63	80
Rated short-circuit current duration	S	4		
Rated short-circuit current breaking times	times	50		
Rated operating sequenee		O-0.3s-CO-180s-CO		
Closing time	ms	≤570		
Opening time	ms	≤550		
Rated energy storage operating voltage	V	≦220/110		
Energy storage time	S	≤510		
Mechanical life	times	≥10000		

Outline and mounting dimensions

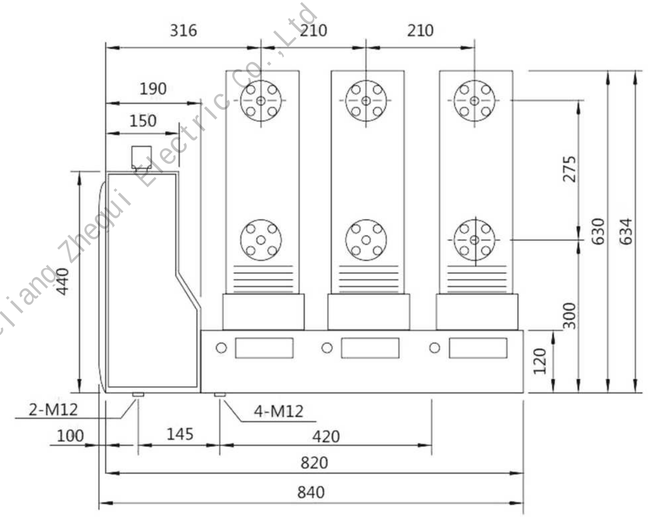

Zheiiang Zhegui Electric Co.,Ltd