手册由浙江浙柜电气有限公司印制，用于说明产品相关的信息。可能因技术升级或生产工艺改进相关内容，对手册的印刷错误及不准确的信息进行改进和更改，不另行通知。联系本公司，以证实相关信息。
The manual is printed by Zhejiang Zhegui Electric Co.,Ltd., Ltd. and is used to explain product related information. The printing errors and inaccurate information in the manual may be improved and modified without prior notice due to technological upgrades or production process improvements. Contact our company to confirm relevant information.

深圳市羽全景设计
178 1567 3367



Giantele®
浙柜电气

诚实守信、科技兴业
Honesty and trustworthiness promoting technological development

ZHEGUI ELECTRIC PRODUCTS CATALOGUE
产品选型手册

出众设计 精密制造 严选材质 严苛检测

Giantele®
浙江浙柜电气有限公司
ZHEJIANG ZHEGUI ELECTRIC CO.,LTD.
地址 Add：浙江省乐清市经济开发区纬十一路 316 号
316 Weishi Road, Economic Development Zone, Leqing City, Zhejiang Province
电话 Tel：13588968658 18815036687
网址 WEB：www.zheguidq.com

添加微信 Add WeChat
添加微信 Add WeChat
电子样本 Catalogue

浙江浙柜电气有限公司
ZHEJIANG ZHEGUI ELECTRIC CO.,LTD.

Zhejiang Zhegui Electric Co., Ltd.

诚实守信、科技兴业
Honesty and trustworthiness
promoting technological development

同心 concentric | 同创 tontru | 同享 Shared | 同辉煌 Same Glory

ABOUT US
关于我们

浙江浙柜电气有限公司，拥有一支实力雄厚、技术精湛、实践经验丰富的专业队伍，荟萃了机械、电子、电气自动化、计算机软硬件等各方面的高级专业技术人才。

浙柜电气以“诚实守信”为基准、“科技兴业”为方针的企业理念、“为用户服务、为用户负责、让用户满意“的服务态度，使公司始终保持强劲的竞争能力和永续的发展动力，并成功开辟了一条适合企业发展的科技创新之路。

未来浙柜电气将一如既往的秉承“放眼全国、稳健发展、守法经营、奉献社会”＂尚科学、严质量、重信誉”；以＂立足品质＂为理念，＂诚实守信”为基准，＂科技兴业＂为方针，脚踏实地紧跟时代步伐，坚持不懈地制造出高品质的产品。

“汇聚我的能量，启动您的事业”！浙柜公司愿与您同心、同创、同享、同辉煌！

Zhejiang Zhegui Electric Co.,Ltd.has a strong, skilled, and experienced professional team, gathering advanced professional and technical talents in various fields such as machinery, electronics, electrical automation, computer software and hardware.

Zhegui Electric adheres to the corporate philosophy of "honesty and trustworthiness" and the policy of "promoting industry through technology", with a service attitude of "serving users, being responsible for users, and satisfying users". This has enabled the company to maintain strong competitiveness and sustainable development momentum, and has successfully opened up a path of technological innovation suitable for enterprise development.

In the future, Zhegui Electric will continue to adhere to the principles of "looking across the country, steady development, law-abiding operation, and dedication to society", "valuing science, strict quality, and reputation", with the concept of "based on quality", "honesty and trustworthiness" as the benchmark, and the policy of "promoting industry through technology". We will keep up with the pace of the times and persistently manufacture high-quality products.

Gather my energy and start your career! Zhegui Cabinet Company is willing to work together with you, create together, enjoy together, and achieve the same glory!



Zhejiang Zhegui Electric Co., Ltd.

HONORARY QUALIFICATIONS
荣誉资质

多年来，我们秉持着专业精神和卓越品质，取得了一系列的企业荣誉。这些荣誉是对我们团队不懈努力和客户长期支持的肯定。如 ISO9001 质量管理体系认证，这证明我们在产品质量控制和服务管理方面始终保持高标准、高要求。

这些荣誉不仅是对我们过去的成就的肯定，更是对我们未来发展的鞭策和动力。在未来的道路上，我们将继续秉持着诚信、创新、品质和客户至上的原则，不断提升自我，追求卓越。感谢您的支持与信任。

For many years, we have upheld the spirit of professionalism and excellent quality, and have achieved a series of corporate honors. These honors are a recognition of our team's unremitting efforts and long-term support from our clients. The ISO9001 quality management system certification proves that we have always maintained high standards and requirements in product quality control and service management.

These honors are not only a recognition of our past achievements, but also a driving force and motivation for our future development. On the future path, we will continue to uphold the principles of integrity, innovation, quality, and customer first, constantly improve ourselves, and pursue excellence. Thank you for your support and trust.



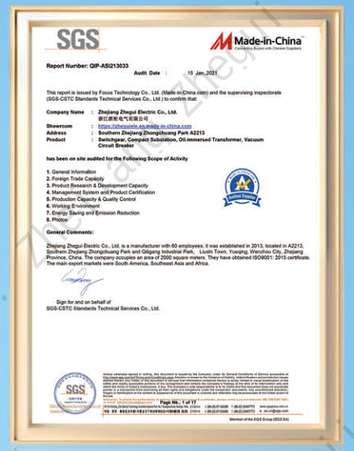





Giantele®
浙柜电气







诚实守信、科技兴业
Honesty and trustworthiness
promoting technological development

Zhejiang Zhegui Electric Co., Ltd.

PRODUCT INDEX
产品索引

Giantele®
浙柜电气

P.01-04



KYN61-40.5(Z)
铠装移开式交流金属封闭开关柜柜体
Armored movable AC
metal enclosed switchgear cabinet body

P.05-06



KYN28-24
铠装移开式交流金属封闭开关设备柜体
Armored movable AC
metal enclosed switchgear cabinet

P.07-13



KYN28A-12(II)
凹凸门铠装移开式交流金属封闭开关柜柜体
Concave convex door armorRemovable
AC metal enclosed switchgear cabinet body

P.14-15



HXGN550-12
高压环网柜
High voltage
ring network cabinet

P.16-17



XGN15-12(SF6 环网柜柜体)
交流金属封闭环网开关设备柜体
Cabinet body of AC
metal enclosed ring network switchgear

P.18-19



HXGN-12
交流金属封闭环网开关柜
AC metal
enclosed ring network switchgear

P.20-21



XGN66-12
箱型固定式开关柜柜体
Box type
fixed switchgear cabinet body

P.22-23



MNS(II)
改进型抽出式开关柜柜体
Improved type
Withdrawable switchgear cabinet body

P.24-25



MNS
(经济型) 改进型抽出式开关柜柜体
(Economy type)Improved
withdrawable switchgear cabinet body

P.26-27



GCS(II)
改进型抽出式开关柜柜体
Improved type
Withdrawable switchgear cabinet body

P.28-30



GCK
抽出式开关柜柜体
Pull-out type
Switch cabinet body

P.31-32



GGD(II)
交流低压配电柜柜体
exchange
Low voltage distribution cabinet body

P.33-34

5G
基站电源配电柜
Base station
power distribution cabinet

P.35-36



直流分体式充电桩
Base station
power distribution cabinet

P.37-38



一体式直流充电桩
Integrated DC
charging station

P.39-40



小型化一体式直流充电桩
Miniaturized
integrated DC charging station

Zhejiang Zhegui Electric Co., Ltd.

KYN61-40.5(Z)

铠装移开式
交流金属封闭开关柜柜体

Armored movable AC
metal enclosed switchgear cabinet body

KYN61-40.5(Z) 铠装移开式金属封闭开关设备（以下简称开关）系40.5KV 三相交流 50HZ 成套配电装置，主要用于发电厂、变电站、工矿企业等的配电室接受和分配电能，对电路的控制保护及监测之用。还可使用于频繁操作的场所。

符合标准：GB3906-1991,IEC298,DL/T404-1997 等。

KYN61-40.5 (Z) armored movable metal enclosed switchgear (hereinafter referred to as the switch) is a 40.5KV three-phase AC 50HZ complete set of distribution equipment, mainly used for receiving and distributing electrical energy in distribution rooms of power plants, substations, industrial and mining enterprises, etc., and for controlling, protecting, and monitoring circuits. It can also be used in places with frequent operations. Compliant with standards: GB3906-1991,IEC298, DL/T404-1997, etc.



Giantele®
浙柜电气

Giantele®
浙柜电气

型号含义 /Model Meaning

K Y N 61 - 40.5 □ / □ □

额定短路开端电流	Rated short-circuit starting current
额定电流	Rated current
断路器种类	Type of circuit breaker
SF6 六氟化硫真空；Z 真空	SF6 sulfur hexafluoride vacuum; Z vacuum
额定电压	Rated voltage
设计序号	Design serial number
使用条件：户内	Usage conditions: indoor
结构特征：移开式	Structural feature: movable type
产品名称：金属铠装式	Product Name: Metal Armored

使用环境条件 /Use environmental conditions

- 周围空气温度：上限 +40℃，下限 -10℃；
- 海拔：≤ 1000m;
- 周围相对湿度：日平均值≤ 95%, 月平均值≤ 90%；
- 周围空气：不适用于有腐蚀、严重污秽、可燃性气体及剧烈震动的场所；
- 若有地震发生，地震烈度不能超过 8 度。
- Surrounding air temperature: upper limit+40 ℃ , lower limit -10 ℃ ;
- Altitude: ≤ 1000m;
- Relative humidity around: daily average ≤ 95%, monthly average ≤ 90%;
- Surrounding air: not suitable for places with corrosion, severe pollution, flammable gases, and severe vibrations;
- If an earthquake occurs, the seismic intensity cannot exceed 8 degrees.

技术参数 /Technical Parameter

项目 project		单位 unit	数据 data		
额定电压 rated voltage		KV	40.5		
额定绝缘水平 rated insulation level	雷电冲击耐压（全波） Lightning impulse withstand voltage (full wave)	KV	185		
	工频耐压 (min) Power frequency withstand voltage (min)		95		
额定频率 Rated frequency		HZ	50		
额定电流 Rated current		A	1250	1600	2000
额定短路开断电流 Rated short circuit breaking current		KA	25、31.5		
额定短路关合电流（峰值）Rated short-circuit making current (peak)		KA	63、80		
额定动稳定电流（峰值）Rated dynamic stable current (peak)		KA	63、80		
4S 热稳定电流（有效值）4S thermal stability current (effective value)		KA	25、31.5		
外壳防护等级 degrees of protection provided by enclosure			IP4X		
外形尺寸（宽 * 深 * 高） External dimensions (width * depth * height)	真空断路器柜 Vacuum circuit breaker cabinet	mm	1200(1400)×2800×2600		
	SF6 断路器柜 SF6 circuit breaker cabinet				

结构特点 /Structural features

开关柜整体由柜体、手车两大部分组成。柜体内可配用 ZN85A、西门子 3AH3 系列真空断路器和进口 S 系列六氯化硫断路器。柜体采用进口敷铝锌板双重折弯成型，由螺栓和拉铆螺母连接而成。接功能特征可分为仪表室、断路器室、电缆室和母线室四部分以接地的金属隔板分隔。其外壳防护等级为 IP3X, 断路器室门打开，断路器手车处于断开 / 试验位置防护等级为 IP2X。

● 手车

手车根据用途分为断路器手车、PT 手车、隔离手车、避雷器手车等。相同规格、尺寸的手车具有良好的互换性，手车在柜内有试验 / 隔离 / 工作位置。设有可靠的联锁装置，能保证手车处在以上几个位置时不能随便移动。

● 断路器室

断路器室中有母线室和电缆室相连的一次触头盒，触头盒前有金属板制成的活门。当断路器的手车向工作位置推进时，活门自动打开，退至隔离 / 试验位置时，活门将自动关闭。开关柜底部装有丝杆螺母推进机构，可以轻松的摇进货摇出手车。

● 母线室

主母线由分支母线、分隔板和母线套筒支撑，主母线、分支母线和相邻柜母线之间都用分隔板、套筒和绝缘罩达到相互隔离的目的。从而限制相邻之间内部故障电弧产生和影响。

● 仪表室

仪表室可以根据不同二次方案，灵活的安装二次元器件。均设有二次电缆通道和金属保护板。

● 电缆室

电缆里可装电流互感器、接地开关、避雷器等。宽裕的空间可接多根电缆。

The switchgear consists of two main parts: the cabinet body and the handcart. The cabinet can be equipped with ZN85A, Siemens 3AH3 series vacuum circuit breakers, and imported S series sulfur hexachloride circuit breakers. The cabinet body is formed by double bending of imported aluminum zinc coated plates, connected by bolts and rivet nuts. The functional characteristics can be divided into four parts: instrument room, circuit breaker room, cable room, and busbar room, separated by grounded metal partitions. Its shell protection level is IP3X, the circuit breaker room door is open, and the circuit breaker handcart is in the open/test position. The protection level is IP2X.

● Handcart

Hand carts are divided into circuit breaker hand carts, PT hand carts, isolation hand carts, lightning arrester hand carts, etc. according to their purposes. Handcarts of the same specifications and sizes have good interchangeability, and they have testing/isolation/working positions inside the cabinet. Equipped with reliable interlocking devices, it can ensure that the handcart cannot move freely when in the above positions.

● Circuit breaker room

In the circuit breaker room, there is a primary contact box connected to the busbar room and cable room, and there is a valve made of metal plate in front of the contact box. When the handcart of the circuit breaker advances towards the working position, the valve will automatically open. When it returns to the isolation/testing position, the valve will automatically close. The bottom of the switchgear is equipped with a screw nut pushing mechanism, which can easily shake the goods in and out of the handcart.

● Bus compartment

The main busbar is supported by branch busbars, divider plates, and busbar sleeves. The main busbar, branch busbars, and adjacent cabinet busbars are separated from each other using divider plates, sleeves, and insulation covers. Thus limiting the generation and impact of internal fault arcs between adjacent areas.

● Instrument room

The instrument room can flexibly install anime devices according to different secondary schemes. Both are equipped with secondary cable channels and metal protective plates.

● Cable room

The cable can be equipped with current transformers, grounding switches, lightning arresters, etc. Abundant space can accommodate multiple cables.

KYN61-40.5(Z) 铠装移开式交流金属封闭开关柜柜体
Armored movable AC
metal enclosed switchgear cabinet body
Giantele® 浙柜电气

● 联锁装置

1、只有当断路器分闸时，手车才能从试验 / 隔离位置移向工作位置或从工作位置移向试验 / 隔离位置；
2、只有当断路器手车在试验 / 隔离位置时，接地开关才能合闸，接地开关合闸时，手车不能从试验 / 隔离位置移向工作位置；
3、当手车处于工作位置时，二次插头被锁定；
4、断路器手车在试验 / 工作位置时，才能合断路器；
5、只有当接地开关合闸时，才能打开开关柜后门。

● Interlocking device

1. Only when the circuit breaker is opened can the handcart move from the test/isolation position to the working position or from the working position to the test/isolation position;
2. The grounding switch can only be closed when the circuit breaker handcart is in the test/isolation position. When the grounding switch is closed, the handcart cannot move from the test/isolation position to the working position;
3. When the handcart is in the working position, the secondary plug is locked;
4. Only when the circuit breaker handcart is in the testing/working position can the circuit breaker be closed;
5. Only when the grounding switch is closed can the back door of the switchgear be opened.

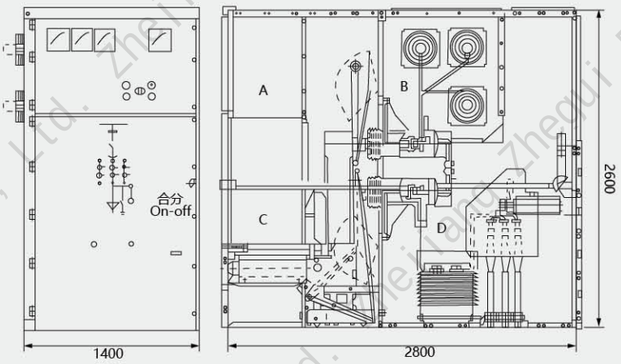

外形尺寸（宽 × 深 × 高）：1400×2800×2600

External dimensions (width × deep × High): 1400 × 2800 × 2600

开关柜结构示意图

A 继电器仪表室；B 母线室；C 断路器室；D 电缆室

Schematic diagram of switchgear structure

A relay instrument room; B busbar room; C circuit breaker room; D cable room

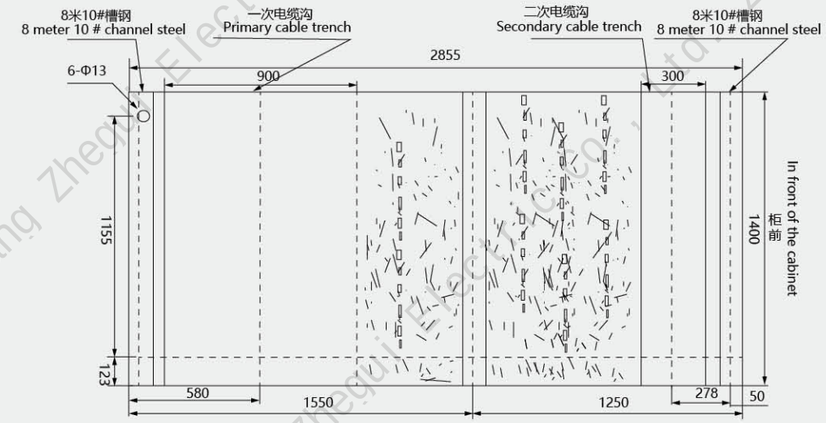

KYN28-24

铠装移
开式交流金属封闭开关设备柜体

Armored movable AC
metal enclosed switchgear cabinet

KYN28-24 型铠装移开式交流金属封闭开关设备系三相交流 50Hz、额定电压 24kV 的户内成套配电装置。

作为发电厂、变电站及工矿企业接受和分配电能之用，对电路起到控制、保护和监测等功能。

KYN28-24 armored movable AC metal enclosed switchgear is a complete indoor distribution device with three-phase AC 50Hz and rated voltage of 24kV.

As a power plant, substation, and industrial and mining enterprise receiving and distributing electrical energy, it plays a role in controlling, protecting, and monitoring circuits.



Giantele®
浙柜电气

Giantele®
浙柜电气

结构说明 /Structure description

开关柜按 GB3906 和 IEC62271-200:2003 要求进行设计。整体由柜体和可抽出部分（手车）两部分组成，柜体结构均采用敷铝锌板用螺栓栓接组装成型，用金属隔板将开关柜内部分隔为断路器室、主母线室、电缆室和继电器仪表室，并且所有金属构件均可靠接地，主回路系统的各隔室均有独立的压力释放通道，在电缆室内可设置 10×60mm 的接地母线。

The switchgear is designed in accordance with the requirements of GB3906 and IEC62271-200:2003. The overall structure is composed of two parts: the cabinet body and the withdrawable part (handcart). The cabinet body is assembled with aluminum zinc coated plates and bolted together. Metal partitions are used to divide the interior of the switchgear into circuit breaker room, main busbar room, cable room, and relay instrument room, and all metal components can be grounded. Each compartment of the main circuit system has independent pressure release channels, and 10 can be set in the cable room × 60mm grounding busbar.

主要特点 /Main feature

- 简单有效地“五防”闭锁，防止误操作；
- 可配用 VS1、VW1、VD4、3AH 等真空断路器；
- 可配用电压互感器手车、隔离手车、熔断器手车等，相同用途的手车具有互换性；
- 柜体可靠墙安装、柜前维护，减少占地面积；
- 断路器室和电缆室可分别加装加热器，防止凝露与腐蚀发生；
- 电缆室空间充裕、可连接多根电缆；
- 外壳防护等级达到 IP4X, 断路器室门打开时及各隔室间防护等级为 IP2X；
- 材质可选用镀锌板或敷铝锌板制作。

- Simple and effective "five prevention" locking to prevent misoperation;
- Can be equipped with vacuum circuit breakers such as VS1, VW1, VD4, and 3AH;
- Can be equipped with voltage transformer handcart, isolation handcart, fuse handcart, etc. handcart for the same purpose has interchangeability;
- Reliable wall installation and maintenance in front of the cabinet to reduce footprint;
- The circuit breaker room and cable room can be equipped with heaters separately to prevent condensation and corrosion from occurring;
- The cable room has ample space and can connect multiple cables;
- The protection level of the shell reaches IP4X, and the protection level between the circuit breaker room door and each compartment is IP2X when opened;
- The material can be made of galvanized sheet or aluminum zinc coated sheet.

使用环境条件 /Use environmental conditions

- 周围空气温度：上限 +40℃下限一般地区 -10℃；
- 海拔：≤ 1000m；
- 相对温度：日平均值不大于 95%、月平均值不大于 90%；

  水蒸气压力：平均值不大于 2.2KPa、月平均值不大于 1.8KPa；

  当温度骤降时可能出现凝露伴随污秽，本产品适用于以下比正常条件更严酷的两种环境条件；

a、凝露不频繁（每月平均不超过两次）有轻度污秽；

b、一般不出现凝露（每月平均不超过两次）有比较严重污秽；

- 没有火灾、爆炸危险及严重污秽足以腐蚀金属和破坏绝缘的气体等恶劣场所；
- 没有剧烈震动，颠簸及垂直倾斜度不超过 8°的场所。

- Surrounding air temperature: upper limit+40 ℃ , lower limit general area -10 ℃ ;
- Altitude: ≤ 1000m;
- Relative temperature: daily average not exceeding 95%, monthly average not exceeding 90%;

Water vapor pressure: average value not exceeding 2.2KPa, monthly average value not exceeding 1.8KPa;

When the temperature drops suddenly, condensation and pollution may occur. This product is suitable for two more severe environmental conditions than normal conditions:;

a. Frequent condensation (no more than twice a month on average) with mild contamination;

b. Generally, there is no condensation (no more than twice a month on average) and there is relatively serious pollution;

- There is no risk of fire, explosion, or severe pollution that can corrode metals and damage insulation in harsh environments;
- Places without severe vibration, bumps, and vertical inclination not exceeding 8 ° .

Zhejiang Zhegui Electric Co., Ltd.

KYN28A-12(II)

凹凸门铠装
移开式交流金属封闭开关柜柜体

Concave convex door armor
Removable AC metal enclosed switchgear cabinet body

KYN28A-12(II) 凹凸门型户内金属装中置移开式开关设备（以下简称开关柜）系三相交流 50Hz 的户内成套配电装置，用于接收和分配 3-12 千伏的网络电能并对电路实行控制保护及监测。本产品继电器小室面板上可安装各种类型的微机综合继电保护装置，并可实现系统的智能化控制，具有遥控、遥测、遥信及遥调功能，能过带有通信接口的 CAN 总线控制现场网络。并具有防止误操作断路器、防止带负荷推拉手车、防止带电关合接地开关、防止接地开关在接地位置送电和防止误入带电间隔，即简称的“五防”功能。

该柜既能配用 VS1(即 ZN63)、ZN21 真空断路器，也可配置进口的 VD4 真空断路器与 VC 系列真空接触器。

KYN28A-12 (II) concave convex door type indoor metal mounted movable switchgear (hereinafter referred to as switchgear) is a three-phase AC 50Hz indoor power distribution device, used to receive and distribute 3-12 kV network energy and control, protect and monitor circuits. This product can install various types of microcomputer integrated relay protection devices on the relay compartment panel, and can achieve intelligent control of the system. It has remote control, telemetry, remote signaling, and remote adjustment functions, and can control the field network through the CAN bus with communication interfaces. And it has the "five prevention" functions, which include preventing accidental operation of circuit breakers, preventing loaded push-pull carts, preventing live closing of grounding switches, preventing grounding switches from transmitting power in the grounding position, and preventing accidental entry into live intervals.

This cabinet can be equipped with both VS1 (i.e. ZN63) and ZN21 vacuum circuit breakers, as well as imported VD4 vacuum circuit breakers and VC series vacuum contactors.



Giantele®
浙柜电气

Giantele®
浙柜电气

使用环境条件 /Environmental conditions for use

- 周围空气温度：上限 +40℃下限一般地区 -10℃；
- 海拔：≤ 1000m；
- 相对温度：日平均值不大于 95%、月平均值不大于 90%；

水蒸气压力：平均值不大于 2.2KPa、月平均值不大于 1.8KPa;

当温度骤降时可能出现凝露伴随污秽，本产品适用于以下比正常条件更严酷的两种环境条件；

a 凝露不频繁（每月平均不超过两次）有轻度污秽；

b 一般不出现凝露（每月平均不超过两次）有比较严重污秽；

- 没有火灾、爆炸危险及严重污秽足以腐蚀金属和破坏绝缘的气体等恶劣场所；
- 没有剧烈震动，颠簸及垂直倾斜度不超过 8°的场所。

- Surrounding air temperature: Upper limit+40 ℃ Lower limit General area -10 ℃ ;
- Altitude: ≤ 1000m;
- Relative temperature: daily average not exceeding 95%, monthly average not exceeding 90%;

Water vapor pressure: average value not exceeding 2.2KPa, monthly average value not exceeding 1.8KPa;

When the temperature drops suddenly, condensation and pollution may occur. This product is suitable for two more severe environmental conditions than normal conditions;

a infrequent condensation (no more than twice a month on average) with mild contamination;

b Generally, there is no condensation (no more than twice a month on average) and there is relatively serious pollution;

- There is no risk of fire, explosion, or severe pollution that can corrode metals and damage insulation in harsh environments;
- Places without severe vibration, bumps, and vertical inclination not exceeding 8° .

产品特点 /Product features

- 简单有效的“五防”闭锁，防止误操作；
- 可配用 ZN63A(VS1)、VD4、ZN21、3AH、VB2 及 VEP 真空断路器 VC 真空接触器、负荷开关及隔离开关等；
- 可配用电压互感器手车、计量手车、隔离手车、站用变落地手车等，相同用途的手车具有互换性；
- 柜体可靠墙安装、柜前维护，减少占地面积；
- 断路器室和电缆可分别加装加热器，防止凝露与腐蚀发生；
- 电缆室空间充裕、可连接多根电缆；
- 开关柜的外壳防护等级达到 IP4X, 各隔室的防护等级为 IP2X。

注：1、允许在 -30℃时储运；2、在海拔超过 1000 的地区，按 JB/2102《高压电器使用海拔地区的技术要求》处理，当海拔不超过 2000 时，低压辅助设备不需要采取任何措施；3、当实际使用条件与上述不同时，应由用户和制造厂双方协商。

- Simple and effective "five prevention" locking to prevent misoperation;
- Can be equipped with ZN63A (VS1), VD4, ZN21, 3AH, VB2, and VEP vacuum circuit breakers, VC vacuum contactors, load switches, and isolation switches;
- Can be equipped with voltage transformer handcart, metering handcart, isolation handcart, station transformer floor handcart, etc. handcart for the same purpose is interchangeable;
- Reliable wall installation and maintenance in front of the cabinet to reduce footprint;
- The circuit breaker room and cables can be separately equipped with heaters to prevent condensation and corrosion;
- The cable room has ample space and can connect multiple cables;
- The enclosure protection level of the switchgear reaches IP4X, and the protection level of each compartment is IP2X.

Note:1. Allow storage and transportation at -30 ℃ ;
2. In areas with an altitude exceeding 1000, according to JB/2102 Technical Requirements for High Voltage Electrical Appliances in Altitude Areas, no measures need to be taken for low-voltage auxiliary equipment when the altitude does not exceed 2000;
3. When the actual usage conditions are different from the above, both the user and the manufacturer should negotiate.

符合标准 /Compliant with standards

- IEC-298
- GB3906-1991
- DL/T404-1997
- GB/T11022-2020

结构简介 /Structure introduction

开关设备按 GB3906-91 中的铠装式金属封闭开光设备而设计。整体由柜体和中置式可抽出部件（即手车）两大部分组成（见图 1）。柜体分四个单独的隔室，外壳防护等级为 IP4X，各小室和断路器室门打开时防护等级为 IP2X。具有架空进出线、电缆进出线及其他功能方案，经排列、组合后能组成各种方案形式的配电装置。

本开关设备可以从正面进行安装调试和维护，因此它可以背靠背组成双重排列和靠墙安装，提高开关设备的安全性，灵活，减少了占地面积。

The switchgear is designed according to the armored metal enclosed switchgear in GB3906-91. The whole is composed of two main parts: a cabinet and a central withdrawable component (i.e. a handcart) (see Figure 1). The cabinet is divided into four separate compartments, with an enclosure protection level of IP4X. When the doors of each compartment and circuit breaker room are opened, the protection level is IP2X. Having overhead incoming and outgoing lines, cable incoming and outgoing lines, and other functional schemes, it can be arranged and combined to form various forms of distribution devices.

This switchgear can be installed, debugged, and maintained from the front, so it can be arranged in a double arrangement and installed against the wall, improving the safety and flexibility of the switchgear, and reducing the footprint.

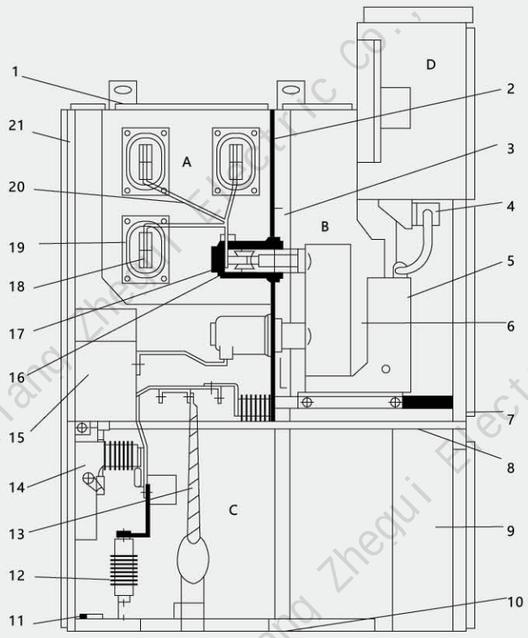

图一 开关设备结构示意图
Figure 1 Schematic diagram of switch equipment structure

A、母线室	A. Bus compartment
B、断路器手车室	B. Circuit breaker handcart room
C、电缆室	C. Cable room
D、继电器仪表	D. Relay instrument
1、泄压装置	1. Pressure relief device
2、装卸式隔板	2. Loading and unloading partition
3、隔板（活门）	3. Partition
4、二次插头	4. Secondary plug
5、断路器手车	5. Circuit breaker handcart
6、加热装置	6. Heating device
7、可抽出式水平隔板	7. Withdrawable horizontal partition
8、接地开关操作机构	8. Grounding switch operating mechanism
9、控制导线槽	9. Control wire duct
10、底板	10. Bottom plate
11、接地母线	11. Grounding busbar
12、避雷器	12. Lightning arrester
13、电缆	13. Cable
14、接地开关	14. Grounding switch
15、电流互感器	15. Current transformer
16、触头盒	16. Contact box
17、静触头装置	17. Static contact device
18、主母线	18. Main busbar
19、母线套管	19. Busbar bushing
20、分支母线	20. Branch busbar
21、外壳	21. Shell

KYN28A-12(II) 凹凸门铠装移开式交流金属封闭开关柜柜体
Concave convex door armor
Removable AC metal enclosed switchgear cabinet body
Giantele® 浙柜电气

外壳 /Shell

开关设备的外壳选用进口败铝锌薄钢板，经 CNC 机床加工，并采取多重折边工艺，这样使整个柜体不仅具有精度高、很强的抗腐蚀与抗氧化作用，而且由于采用多重折边工艺，使柜体比其他同类设备柜体整体重量轻、机械强度高、外形美观。可以有高低柜和平顶柜两种柜形，柜体采用组装式结构，用拉铆螺母和高强度的螺栓联接而成，这样使加工厂生产周期短、零部件通用性强、占地面积少，便于组织生产。

The shell of the switchgear is made of imported aluminum zinc thin steel plate, processed by CNC machine tool, and adopts multiple folding processes. This not only makes the entire cabinet have high precision, strong corrosion resistance and oxidation resistance, but also makes the cabinet lighter in weight, higher in mechanical strength, and more aesthetically pleasing than other similar equipment cabinets due to the use of multiple folding processes. There can be two types of cabinet shapes: high and low cabinets and flat top cabinets. The cabinet body adopts an assembled structure, which is connected by rivet nuts and high-strength bolts. This makes the production cycle of the processing plant short, the parts have strong universality, and the footprint is small, making it easy to organize production.

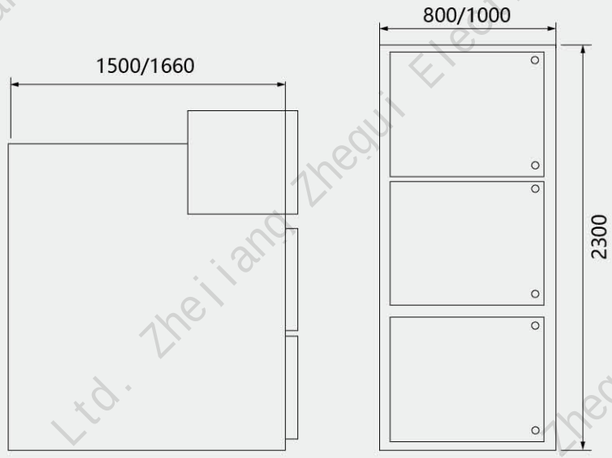

额定电流大于 1600A 为 1000，其余为 800；

电线进出线为 1500 架空进出线为 1660。

1000 for rated current greater than 1600A, and 800 for others;

The incoming and outgoing wires are 1500, and the overhead incoming and outgoing wires are 1600.

隔室 /Compartment

开关设备主要电气元件都有其独立的隔室，即断路器手车室、母线室、电缆室、断路器仪表室。各隔间防护等级都达到 IP2X；除继电器室外，其他三隔室都分别有其泄压通道。由于采用了中置式形式，电缆室位置大大增加，因此设备可接多路电缆。

The main electrical components of the switchgear have their own independent compartments, namely the circuit breaker handcart room, busbar room, cable room, and circuit breaker instrument room. Each compartment has a protection level of IP2X; Except for the relay room, the other three compartments have their own pressure relief channels. Due to the adoption of a mid mounted form, the position of the cable compartment is greatly increased, allowing the equipment to connect multiple cables.

手车 /Handcart

手车骨架也采用薄钢钣金 CNC 机床加工后组装而成。手车与柜体绝缘配合，机械联锁安全、可靠灵活。根据用途不同手车分断路器手车、电压互感器手车、计量手车、隔离手车。各类手车按模数，积木式变化，同规格手车可以百分百自由互换。手车在柜体内有断开位置，试验和工作位置，每一位置都分别有到位装置，以保证联锁可靠，必须按连锁防误操作程序进行操作。各种手车均采用涡轮、涡杆摇动推进、退出，其操作轻便、灵活，适合于值班人员操作。手车当需要移开柜体时，用一只专用转运车，就可以方便取出，进行各种检查、维护；而且采用中置式，整个小车体积小，检查、维护都极方便。

断路器手车上装有真空断路器及其他辅助设备。当手车用转运车运入柜体断路器室时，便能可靠锁定在断开位置，试验位置；而且柜体位置显示灯便显示其所在位置。而且只有完全锁定后，才能摇动推进机构，将手车推向工作位置。手车到工作位置后，推进手柄即摇不动，其对应位置显示灯便显示其所在位置，手车的机械联锁能可靠保证手车只能在工作位置或试验位置，断路器才能进行合闸；而且，手车只有在分闸状态，断路器才能移动。

The handcart frame is also assembled using a thin steel sheet metal CNC machine tool after processing. The handcart and cabinet are insulated and coordinated, and the mechanical interlocking is safe, reliable, and flexible. According to different purposes, the handcart can be divided into circuit breaker handcart, voltage transformer handcart, metering handcart, and isolation handcart. Various types of handcrafts vary in modular and block style, and handcrafts of the same specification can be freely exchanged 100%. The handcart has disconnection positions, testing and working positions inside the cabinet, and each position has a positioning device to ensure reliable interlocking. It must be operated according to the interlocking anti misoperation procedure. All types of handcart are propelled and exited by turbo and vortex rod shaking, making their operation light and flexible, suitable for duty personnel to operate. When the handcart needs to be moved away from the cabinet, a dedicated transfer vehicle can be used for easy removal, various inspections, and maintenance; Moreover, it adopts a mid mounted design, making the entire car compact and extremely convenient for inspection and maintenance.

The circuit breaker handcart is equipped with a vacuum circuit breaker and other auxiliary equipment. When the handcart is transported into the cabinet circuit breaker room by a transfer vehicle, it can be reliably locked in the open position and test position; And the cabinet position display light shows its location. And only when fully locked can the propulsion mechanism be shaken to push the handcart towards the working position. After the handcart reaches the working position, the push handle cannot be shaken, and the corresponding position display light will show its position. The mechanical interlocking of the handcart can reliably ensure that the handcart can only be in the working or testing position, and the circuit breaker can only be closed; Moreover, the circuit breaker can only move when the handcart is in the open state.

防止误操作的联锁装置 /Interlock device to preventmisoperation

开关设备内装有安全可靠的联锁装置，完全满足五防的要求；

a、仪表室门上装有提示性的按钮或者转换开关，以防止误合断路器；

b、断路器手车在试验或工作位置时，断路器才能进行合分操作，而且在断路器合；

闸后，手车无法移动，防止了带负荷误操作推拉断路器；

C、仅当接地开关处在分闸位置时，断路器手车才能从试验，断开位置移至工作位置，仅当断路器手车处于试验，断开位置时，接地开关才能进行合闸操作（接地开关可带电压显示装置）；

这样实现了防止带电误合接地开关及防止了接地开关处在闭合位置时关合断路器；

d、接地开关处于分闸位置时，下门及后门都无法打开，防止了误入带电间隔；

e、断路器手车确实在试验或工作位置，而没有控制电压时，仅能手动分闸，不能合闸；

f、断路器手车在工作位置时，二次插头被锁定不能拔除；

g、各柜体可装电气联锁；

本开关设备还可以在接地开关操作机构上加装电磁铁锁定装置以提高可靠性，其订货按用户的需求选择。

The switchgear is equipped with a safe and reliable interlocking device, which fully meets the requirements of the five defenses;

a. The instrument room door is equipped with a prompt button or switch to prevent accidental closing of the circuit breaker;

b. When the circuit breaker handcart is in the testing or working position, the circuit breaker can only be opened and closed, and the circuit breaker must be closed;

After the switch is turned off, the handcart cannot move, preventing accidental operation of the push-pull circuit breaker with load;

KYN28A-12(II) 凹凸门铠装移开式交流金属封闭开关柜柜体
Concave convex door armor
Removable AC metal enclosed switchgear cabinet body
Giantele® 浙柜电气

C. Only when the grounding switch is in the open position can the circuit breaker handcart move from the test and open position to the working position. Only when the circuit breaker handcart is in the test and open position can the grounding switch perform a closing operation (the grounding switch can be equipped with a voltage display device);

This achieves the prevention of accidental closing of the grounding switch when energized and prevents the circuit breaker from being closed when the grounding switch is in the closed position;

d. When the grounding switch is in the open position, both the lower and rear doors cannot be opened to prevent accidental entry into the live space;

e. When the circuit breaker handcart is indeed in the testing or working position and there is no voltage control, it can only be manually opened and cannot be closed;

f. When the circuit breaker handcart is in the working position, the secondary plug is locked and cannot be removed;

g. Each cabinet can be equipped with electrical interlocking;

This switchgear can also be equipped with an electromagnetic locking device on the grounding switch operating mechanism to improve reliability, and its ordering is selected according to user needs.

带电显示装置 /Charged display device

如果用户有所需求时，开关柜内可设有监测一次回路运行的可选件即带电显示装置。该装置由高压传感器和可携带式显示器两单元组成，经用户外接导电线连接为一体。

该装置不仅可以提示高压回路带电状况，而且还可以与电磁锁配合，实现强制闭锁开关手柄、网门，以达到防止带电关合接地开关、防止误入带电间隔，从而提高配套产品的防误性能。

If there is a demand from the user, an optional component, namely a live display device, can be installed inside the switchgear to monitor the operation of the primary circuit. The device consists of two units: a high-voltage sensor and a portable display, which are connected together through outdoor conductive wires.

This device can not only indicate the electrification status of high-voltage circuits, but also cooperate with electromagnetic locks to achieve forced locking of switch handles and network doors, in order to prevent live closing of grounding switches and accidental entry into live intervals, thereby improving the anti error performance of supporting products.

防止凝露和腐蚀 /Prevent condensation andcorrosion

为了防止在高湿度和温度变化较大的气候环境中产生凝露带来之危脸，在断路器室和电缆室内分别装设加热器，以便在上述环境之中使用和防止腐蚀发生。

In order to prevent condensation in climate environments with high humidity and significant temperature changes, heaters are installed separately in the circuit breaker room and cable room to facilitate use and prevent corrosion.

开关柜的安装 /Installation of switch cabinet

1、开关柜的安装尺寸与基础安装尺寸见下图；

2、柜体单列时，柜前走廊以 2.5 米为宜，双列布工时，柜前操作走廊以 3 米为宜；

3、按工程需要与图纸标明，将开关柜连至他们特定的位置，如果一排较长的开关柜排列（为 10 台以上），拼柜工作应从中部开始；

4、当开关柜已完全组合（拼接）好时，可用 M12 地脚螺栓将其与基础构架相联成用电焊与基础焊牢。

1. The installation dimensions of the switchgear and the basic installation dimensions are shown in the following figure;

2. When the cabinet is in a single row, it is advisable to have a corridor in front of the cabinet of 2.5 meters, with double row working hours, and a corridor in front of the cabinet of 3 meters for operation;

3. According to the engineering requirements and drawings, connect the switchgear to their specific positions. If a row of longer switchgear is arranged (more than 10 units), the cabinet assembly work should start from the middle;

4. When the switchgear is fully assembled (spliced), M12 anchor bolts can be used to connect it to the foundation structure and weld it firmly with the foundation by welding.

Giantele®
浙柜电气

开关柜的安装 /Installation of switch cabinet

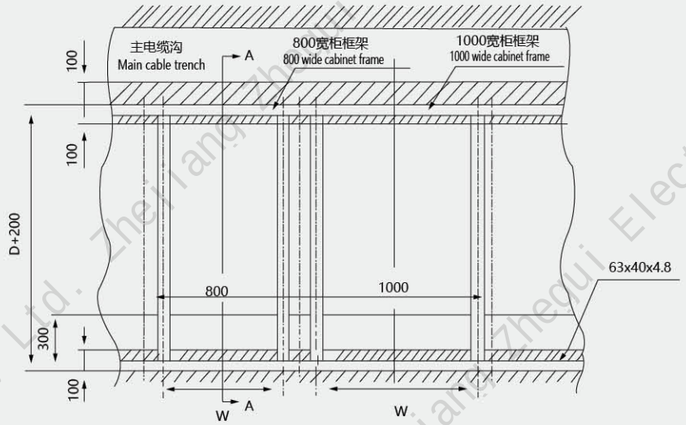

W(mm)	D(mm)	净深 (mm) Net depth(mm)	L2 (mm)
800	1500 电缆 cable	1450	630
	1660 架空 overhead	1610	
1000	1500 电缆 cable	1450	830
	1660 架空 overhead	1610	

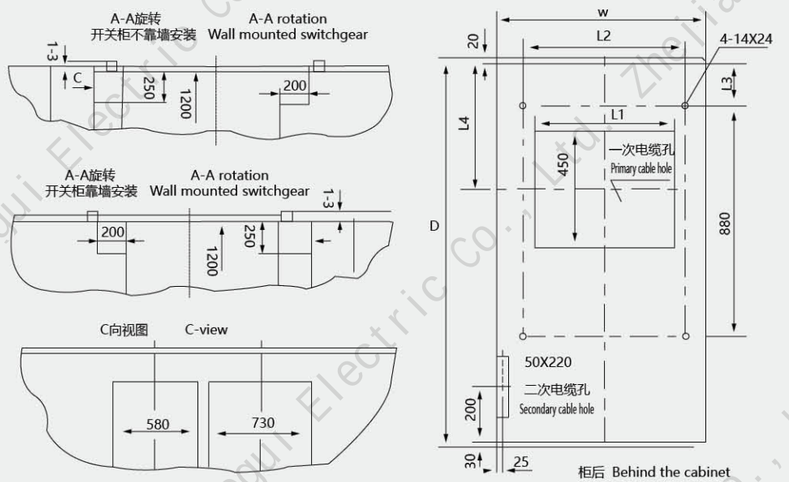

名称 name	数据 data
额定绝缘水平 rated insulation level	3.6/24、7.2/32、12/42
雷电冲击耐压（全波）KVLightning impulse withstand voltage (full wave) KV	40、60、75
额定频率 Hz Rated frequency Hz	50
额定电流 A Rated current A	630、1250、1600、2000、2500、3150
4S 短时耐受电流 KA 4S short-term withstand current KA	20、25、31、31.5、40、50
额定峰值耐受电流 KA Rated peak withstand current KA	50、63、80、100、125
防护等级 protection grade	IP4X

HXGN550-12

高压
环网柜

High voltage
ring network cabinet

HXGN550-12 型固定式环网柜，适用于 10kV 三相交流 50Hz 环网或终端供电系统中，作为接受、分配电能或过载、短路保护之用，特别适用于无油化、不检修及频繁操作的场所。

HXGN550-12 fixed ring main unit is suitable for receiving and distributing electrical energy or for overload and short circuit protection in 10kV three-phase AC 50Hz ring main or terminal power supply systems. It is particularly suitable for oil-free, non maintenance, and frequent operation places.



Giantele®
浙柜电气

Giantele®
浙柜电气

主要特点 /Main feature

- 采用的真空断路器，上下隔离开关，接地开关，长寿命、高参数、无污染、少维护；
- 外壳选用优质敷铝锌板，具有耐腐蚀、抗氧化、外形结构新颖、美观等优点；
- 弹簧储能操作，三相可自动跳脱，五防联锁与操作机构一体，联动安全可靠；
- 环网柜可方便构成环网供电单元及其它接线方式，可扩展性好；
- 采用真空断路器，上下隔离开关，接地开关，，综合性能安全可靠，无油、无毒、不会发生火灾爆炸危险；
- 材质可选用镀锌板、可敷铝锌板制作。

- The vacuum circuit breaker used, upper and lower isolation switches, grounding switches, long service life, high parameters, pollution-free, and less maintenance;
- The shell is made of high-quality aluminum zinc coated plate, which has advantages such as corrosion resistance, oxidation resistance, novel external structure, and aesthetics;
- Spring energy storage operation, three-phase automatic tripping, five proof interlocking integrated with operating mechanism, linkage safe and reliable;
- The ring main unit can conveniently form a ring network power supply unit and other wiring methods, with good scalability;
- Adopting vacuum circuit breakers, upper and lower isolation switches, grounding switches, with comprehensive safety and reliability, oil-free, non-toxic, and no fire and explosion hazards;
- The material can be made of galvanized sheet or aluminum zinc coated sheet.

使用环境条件 /Use environmental conditions

- 周围环境温度上限 +40℃，下限 -25° C; 海拔高度不大于 1000m;
- 相对温度日平均值不大于 95%，月平均值不大于 90%；
- 无火灾、爆炸危脸及剧烈振动的场所；
- 周围空气无腐蚀性或可燃性气体，水蒸汽和导电性尘埃等明显污染。

- The upper limit of ambient temperature is+40 ℃ , and the lower limit is -25 ° C; The altitude shall not exceed 1000m;
- The daily average relative temperature shall not exceed 95%, and the monthly average shall not exceed 90%;
- Places without fire, explosion hazards, and severe vibrations;
- There is no significant pollution from corrosive or flammable gases, water vapor, and conductive dust in the surrounding air.

柜体外形尺寸 /Cabinet size

宽 × 深 × 高 wide × deep × Height:

550×1000×2000

550×1000×2200

订货须知 /Download Google

订货时应提供下列技术资料：

1、主接线方案编号、用途和单线系统图、额定电压、额定电流，额定短路开断电流 \ 配电室平面布置图及开关柜的排列配置图等；

2、开关柜控制、测量及保护功能的要求以及其它闭锁和自动装置的要求及原理图；

3、开关柜内主要电气元件的型号，规格及数量；

4、开关柜使用在特殊环境条件时，应在订货时详细说明；

5、其它特殊要求，在订货前须详细书面说明、协商。

The following technical information should be provided when placing an order:

1. Main wiring scheme number, purpose, single line system diagram, rated voltage, rated current, rated short-circuit breaking current, distribution room layout plan, and switchgear arrangement and configuration diagram, etc;
2. Requirements for control, measurement, and protection functions of switchgear, as well as requirements and schematic diagrams for other interlocking and automatic devices;
3. The models, specifications, and quantities of the main electrical components inside the switchgear;
4. When the switchgear is used in special environmental conditions, detailed instructions should be provided when placing an order;
5. Other special requirements must be explained and negotiated in detail in writing before placing an order.

XGN15-12(SF6 环网柜柜体)

交流金属封闭
环网开关设备柜体

Cabinet body of AC
metal enclosed ring network switchgear

XGN15-12 型交流金属封闭环网开关设备，适用于 10KV 三相交流 50Hz 环网或终端供电系统中，作为接受、分配电能或过载、短路保护之用，特别适用于无油化、不检修及频繁操作的场所。

XGN15-12 type AC metal enclosed ring network switchgear is suitable for 10KV three-phase AC 50Hz ring network or terminal power supply system. It is used for receiving and distributing electrical energy or overload and short circuit protection, especially suitable for oil-free, non maintenance and frequent operation places.



Giantele®
浙柜电气

Giantele® 浙柜电气

执行标准 /Executive standard

GB3906-2006《3.6KV~40.5KV 交流金属封闭开关设备和控制设备》。

IEC60298-1990《额定电压 1KV 以上至 52KV 及以下交流金属封闭开关设备和控制设备》GB/T11022-2011《高压开关设备和控制设备标准的共用技术要求》。

GB3906-2006 3.6KV~40.5KV AC Metal Enclosed Switchgear and Control Equipment.

IEC60298-1990 AC Metal Enclosed Switchgear and Control Equipment with Rated Voltages from 1KV to 52KV and Below GB/T11022-2011 Common Technical Requirements for High Voltage Switchgear and Control Equipment Standards.

主要特点 /Main feature

- 采用负荷开关是独立单元，内部充以六氟化硫气体作为绝缘介质，长寿命、高参数、无污染、少维护：可配施耐德 SF6 负荷开关，ABB 产 SFL-12、SFG-12 开关，FLN36-12 开关，FL44-12 开关；
- 外壳选用优质敷铝锌板，具有耐腐蚀、抗氧化、外形结构新颖、美观等优点；
- 弹簧储能操作，三相可自动跳脱，五防联锁与操作机构一体，联动安全可靠；
- 环网柜可方便构成环网供电单元及其它接线方式，可扩展性好；
- 采用六氟化硫负荷开关，综合性能安全可靠，无油、无毒、不会发生火灾爆炸危险；
- 材质可选用镀锌板或敷铝锌板制作。

- The load switch is an independent unit filled with sulfur hexafluoride gas as the insulation medium, with long service life, high parameters, no pollution, and low maintenance. It can be equipped with Schneider SF6 load switches, ABB SFL-12 and SFG-12 switches, Chint FLN36-12 switches, and Shunkai FL44-12 switches;
- The shell is made of high-quality aluminum zinc coated plate, which has advantages such as corrosion resistance, oxidation resistance, novel external structure, and aesthetics;
- Spring energy storage operation, three-phase automatic tripping, five proof interlocking integrated with operating mechanism, linkage safe and reliable;
- The ring main unit can conveniently form a ring network power supply unit and other wiring methods, with good scalability;
- Adopting sulfur hexafluoride load switch, comprehensive performance is safe and reliable, oil-free, non-toxic, and will not cause fire and explosion hazards;
- The material can be made of galvanized sheet or aluminum zinc coated sheet.

使用环境条件 /Use environmental conditions

- 海拔高度：≤ 1000m(如有特殊要求可在订货时注明)；
- 环境温度：-35℃ ~+45℃，最大日平均温差≤ 25℃；
- 日相对湿度平均不超过 95%，月平均相对湿度不超过 90%；
- 抗震能力：8 度；
- 没有剧烈震动和冲击以及没有火灾、化学腐蚀、爆炸危险场所。

- Altitude: ≤ 1000m (special requirements can be specified when placing an order);
- Environmental temperature: -35 ℃ ~+45 ℃ , maximum daily average temperature difference ≤ 25 ℃ ;
- The average daily relative humidity does not exceed 95%, and the average monthly relative humidity does not exceed 90%;
- Seismic resistance: 8 degrees;
- There are no severe vibrations and impacts, as well as no hazardous areas for fire, chemical corrosion, or explosion.

外形尺寸 /Dimensions

高 × 宽 × 深 high × wide × deep：

1650×375×940	1650×500×940	1650×750×940
1885×375×940	1885×500×940	1885×750×940
2000×550×950	2000×650×950	2000×700×950
2200×550×950	2200×650×950	2200×700×950

HXGN-12

交流金属
封闭环网开关柜

AC metal
enclosed ring network switchgear

Giantele® 浙柜电气

HXGN-12 型交流金属封闭环网开关设备，适用于 12kV 三相交流 50Hz 环网或终端供电系统中，作为接受、分配电能或过载、短路保护之用，特别适用于无油化、不检修及频繁操作的场所。

HXGN-12 type AC metal enclosed ring network switchgear is suitable for 12kV three-phase AC 50Hz ring network or terminal power supply system. It is used for receiving and distributing electrical energy or overload and short circuit protection, especially suitable for oil-free, non maintenance and frequent operation places.



Giantele® 浙柜电气

Giantele®
浙柜电气

主要特点 /Main feature

- 采用的负荷开关是独立单元，内部充以六氟化硫气体作为绝缘介质，长寿命、高参数、无污染、少维护；
- 外壳选用优质敷铝锌板，具有耐腐蚀、抗氧化、外形结构新颖、美观等优点；
- 弹簧储能操作，三相可自动跳脱，五防联锁与操作机构一体，联动安全可靠；
- 环网柜可方便构成环网供电单元及其它接线方式，可扩展性好；
- 采用六氟化硫负荷开关，综合性能安全可靠，无油、无毒、不会发生火灾爆炸危险；
- 材质可选用镀锌板、可敷铝锌板制作。

- The load switch used is an independent unit, filled with sulfur hexafluoride gas as the insulation medium, with long service life, high parameters, no pollution, and less maintenance;
- The shell is made of high-quality aluminum zinc coated plate, which has advantages such as corrosion resistance, oxidation resistance, novel external structure, and aesthetics;
- Spring energy storage operation, three-phase automatic tripping, five proof interlocking integrated with operating mechanism, linkage safe and reliable;
- The ring main unit can conveniently form a ring network power supply unit and other wiring methods, with good scalability;
- Adopting sulfur hexafluoride load switch, comprehensive performance is safe and reliable, oil-free, non-toxic, and will not cause fire and explosion hazards;
- The material can be made of galvanized sheet or aluminum zinc coated sheet.

使用环境条件 /Use environmental conditions

- 海拔高度：≤ 1000m(如有特殊要求可在订货时注明)；
- 环境温度：-35℃ +45℃，最大日平均温差≤ 25℃；
- 日相对湿度平均不超过 95%，月平均相对湿度不超过 90%；
- 抗震能力：8 度；
- 没有剧烈震动和冲击以及没有火灾、化学腐蚀、爆炸危险场所。

- Altitude: ≤ 1000m (special requirements can be specified when placing an order);
- Environmental temperature: -35 ℃ +45 ℃ , maximum daily average temperature difference ≤ 25 ℃ ;
- The average daily relative humidity does not exceed 95%, and the average monthly relative humidity does not exceed 90%;
- Seismic resistance: 8 degrees;
- There are no severe vibrations and impacts, as well as no hazardous areas for fire, chemical corrosion, or explosion.

订货须知 /Download Google

订货时应提供下列技术资料：

1、主接线方案编号、用途和单线系统图、额定电压、额定电流，额定短路开断电流 \ 配电室平面布置图及开关柜的排列配置图等；

2、开关柜控制、测量及保护功能的要求以及其它闭锁和自动装置的要求及原理图；

3、开关柜内主要电气元件的型号，规格及数量；

4、开关柜使用在特殊环境条件时，应在订货时详细说明；

5、其它特殊要求，在订货前须详细书面说明、协商。

The following technical information should be provided when placing an order:

1. Main wiring scheme number, purpose, single line system diagram, rated voltage, rated current, rated short-circuit breaking current, distribution room layout plan, and switchgear arrangement and configuration diagram, etc;

2. Requirements for control, measurement, and protection functions of switchgear, as well as requirements and schematic diagrams for other interlocking and automatic devices;

3. The models, specifications, and quantities of the main electrical components inside the switchgear;

4. When the switchgear is used in special environmental conditions, detailed instructions should be provided when placing an order;

5. Other special requirements must be explained and negotiated in detail in writing before placing an order.

XGN66-12

箱型
固定式开关柜柜体

Box type
fixed switchgear cabinet body

XGN66-12 型开关柜适用于 3-10KV 三相交流 50Hz 单母线系统中，作为接受和分配电能之用，属于新一代小型化城乡电网设备，具有小型化、结构合理、安全可靠、运行操作简单等特点。

The XGN66-12 switchgear is suitable for use in 3-10KV three-phase AC 50Hz single busbar systems, as it is used for receiving and distributing electrical energy. It belongs to the new generation of miniaturized urban and rural power grid equipment, and has the characteristics of miniaturization, reasonable structure, safety and reliability, and simple operation.



Giantele®
浙柜电气

XGN66-12 箱型固定式开关柜柜体
Box type
Fixed switchgear cabinet body

Giantele®
浙柜电气

主要特点 /Main feature

- 柜体结构采用组装式，无须焊接，具有较高的机械强度；
- 柜体后部上方采用 GN30-12 旋转隔离开关，下隔离采用 GN19-12 隔离开关，具有按程序操作的可靠机械联锁装置，为操作人员与设备提供可靠的安全性保护；
- 柜体可配装机构一体化的真空断路器，固定式 VS1-12,VD4-12 等断路器；
- 主开关、隔离开关及柜门之间均采用强制性机械闭锁方式，产品满足“五防”功能要求；
- 电缆接线端头距地空间大，便于电缆的制作安装和检测维护；
- 外壳防护等级为 IP3X。

- The cabinet structure adopts an assembly type, without welding, and has high mechanical strength;
- The GN30-12 rotary isolation switch is used above the rear of the cabinet, and the GN19-12 isolation switch is used for the lower isolation. It has a reliable mechanical interlocking device that operates according to the program, providing reliable safety protection for operators and equipment;
- The cabinet can be equipped with vacuum circuit breakers with integrated mechanisms, fixed VS1-12, VD4-12 and other circuit breakers;
- The main switch, isolation switch, and cabinet door all adopt mandatory mechanical locking method, and the product meets the "five prevention" functional requirements;
- The cable terminal has a large distance from the ground, making it convenient for the production, installation, inspection, and maintenance of cables;
- The shell protection level is IP3X.

使用环境条件 /Use environmental conditions

- 周围空气温度：上限 +40℃下限一般地区 -10℃；
- 海拔：≤ 1000m；
- 相对温度：日平均值不大于 95%、月平均值不大于 90%；

水蒸气压力：平均值不大于 2.2KPa、月平均值不大于 1.8KPa；

当温度骤降时可能出现凝露伴随污秽，本产品适用于以下比正常条件更严酷的两种环境条件；

a、凝露不频繁（每月平均不超过两次）有轻度污秽；

b、一般不出现凝露（每月平均不超过两次）有比较严重污秽；

- 没有火灾、爆炸危险及严重污秽足以腐蚀金属和破坏绝缘的气体等恶劣场所；
- 没有剧烈震动，颠簸及垂直倾斜度不超过 8°的场所。

- Surrounding air temperature: upper limit+40 ℃ , lower limit general area -10 ℃ ;
- Altitude: ≤ 1000m;
- Relative temperature: daily average not exceeding 95%, monthly average not exceeding 90%;

Water vapor pressure: average value not exceeding 2.2KPa, monthly average value not exceeding 1.8KPa;

When the temperature drops suddenly, condensation and pollution may occur. This product is suitable for two more severe environmental conditions than normal conditions:

a. Frequent condensation (no more than twice a month on average) with mild contamination;

b. Generally, there is no condensation (no more than twice a month on average) and there is relatively serious pollution;

- There is no risk of fire, explosion, or severe pollution that can corrode metals and damage insulation in harsh environments;
- Places without severe vibration, bumps, and vertical inclination not exceeding 8° .

柜体外形尺寸 /Cabinet size

宽 × 深 × 高：900×1000×2000

宽 × 深 × 高：900×1000×2200

注：如有架空进出线需另外增加 400 深的附柜。

wide × deep × Height: 900 × 1000 × 2000

wide × deep × Height: 900 × 1000 × 2200

Note: If there are overhead incoming and outgoing lines, an additional 400 deep accessory cabinet needs to be added.

MNS(II)

改进型
抽出式开关柜柜体

Improved type
Withdrawable switchgear cabinet body

MNS(II) 低压成套开关设备是在标准型的基础上改进研制的产品。适用于交流 50(60)Hz 额定工作电压 660V 及以下的系统，用于发电、配电、电能转换和电能消耗设备的控制。

The MNS (II) low-voltage switchgear is an improved and developed product based on the standard type. Suitable for systems with a rated working voltage of 660V and below at AC 50 (60) Hz, used for control of power generation, distribution, energy conversion, and energy consumption equipment.

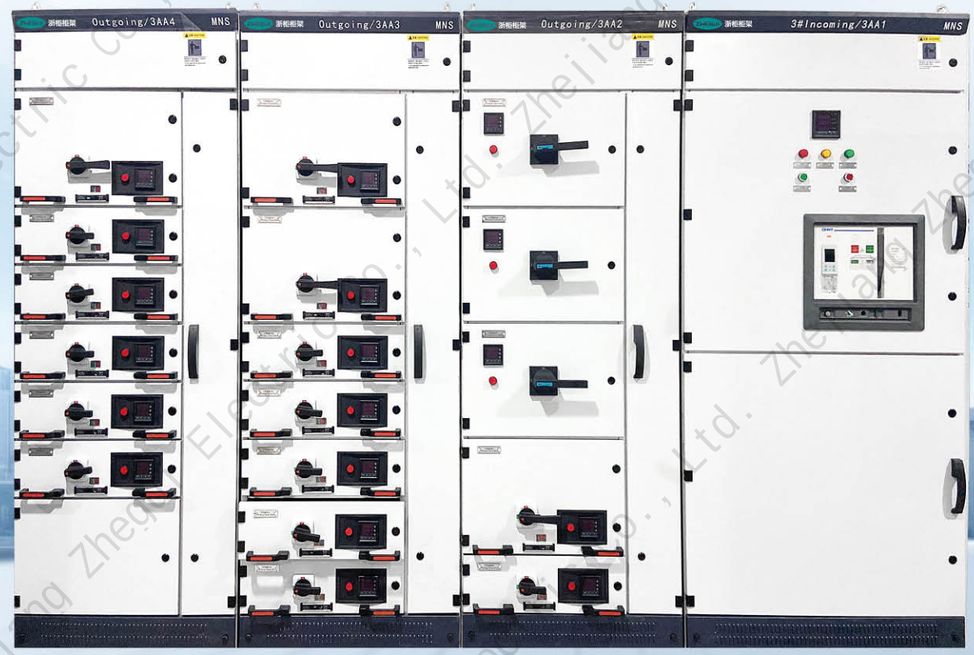

Giantele®
浙柜电气

Giantele®
浙柜电气

符合标准 /Standards compliant

符合国家标准 GB7251.1《低压成套开关设备和控制设备》、JB/T9661《低压抽出式成套开关设备》及国标标准 IEC439。

Complies with national standards GB7251.1 "Low voltage switchgear and control equipment", JB/T9661 "Low voltage withdrawable switchgear", and national standard IEC439.

结构说明 /Structure description

装置基本框架为 C 型材组合式结构，框架的全部结构件都经过镀锌处理或覆铝锌板制作。
通过自攻锁紧螺钉 8.8 级六角螺钉紧固互相连接成基本框架，再按方案变化需要，加上相应的门、封板、隔板、安装支架，以及母线、功能单元等零件，组装成一台完整的装置，装置内零部件尺寸、隔室尺寸，实行模数化（模数单位 E=25m)。垂直通道及一二次接插件均改为 GCK 柜的形式，水平母线也可放置柜顶，顶盖可开启，采用后出线或侧出线方式均可。在保持原有工作性能及外观的同时，实现安全可靠，安装、检测、维修便捷并降低生产成本。柜体防护等级 IP3X-4X。

The basic framework of the device is a C-shaped composite structure, and all structural components of the framework are galvanized or coated with aluminum zinc plate.
By using self tapping locking screws and 8.8 grade hexagonal screws to tighten and connect each other into a basic framework, and then adding corresponding doors, sealing plates, partitions, installation brackets, as well as components such as busbars and functional units according to the needs of the scheme changes, a complete device is assembled. The dimensions of the components and compartments inside the device are modularized (modular unit E=25m). The vertical channel and primary and secondary connectors have been changed to the form of GCK cabinets. The horizontal busbar can also be placed on the top of the cabinet, and the top cover can be opened. Both rear and side outlets can be used. While maintaining its original working performance and appearance, it achieves safety and reliability, convenient installation, testing, and maintenance, and reduces production costs. The cabinet protection level is IP3X-4X.

抽屉类型 /Drawer type

- 抽屉类型：分五种标准尺寸，都是以 8E(200mm) 高度为基准，它们分别为 8E/4,8E/2,8E,16E 和 24E。
- 8E/4: 在 8E(200mm) 高度空间组装 4 个抽屉单元：
- 8E/2: 在 8E(200mm) 高度空间组装 2 个抽屉单元：
- 8E: 在 8E（200mm) 高度空间组装 1 个抽屉单元：
- 16E: 在 16E(400mm) 高度空间组装 1 个抽屉单元：
- 24E: 在 24E（600mm) 高度空间组装 1 个抽屉单元：

我公司专门设计了 6E(150mm) 电流至 250A 抽屉单元，单台柜最多可容纳 12 层单元 (150mm) 抽屉。单元回路额定电流 630A 以下，其中 1/2 单元抽屉最大电流可达到 125A。
抽屉安装单元有效高度 1800m, 相同功能单元的抽屉具有良好的互换性，抽屉进出线根据电流大小采用不同规格的后出式接插件，1/2 单元抽屉与电缆室的转接采用 FZD 型转接单元，抽屉单元设机械联锁装置，抽屉单元有足够数量的二次接插件。

- Drawer types: There are five standard sizes, all based on a height of 8E (200mm), which are 8E/4,8E/2,8E, 16E, and 24E, respectively.
- 8E/4: Assemble 4 drawer units in a space of 8E (200mm) height:
- 8E/2: Assemble 2 drawer units in a space of 8E (200mm) height:
- 8E: Assemble one drawer unit in a space of 8E (200mm) height:
- 16E: Assemble one drawer unit in a 16E (400mm) height space:
- 24E: Assemble one drawer unit in a 24E (600mm) height space:

Our company has specially designed drawer units with a current of 6E (150mm) up to 250A, and a single cabinet can accommodate up to 12 layers of drawer units (150mm). The rated current of the unit circuit is below 630A, and the maximum current of 1/2 unit drawer can reach 125A.
The effective height of the drawer installation unit is 1800m, and drawers with the same functional unit have good interchangeability. The drawer inlet and outlet lines use different specifications of rear outlet connectors according to the current size. The connection between the 1/2 unit drawer and the cable room uses FZD type adapter units, and the drawer unit is equipped with a mechanical locking device. The drawer unit has a sufficient number of secondary connectors.

柜体外形尺寸 /Cabinet size

宽 W* 深 D* 高 H=600*800*2200， 600*1000*2200
800*800*2200， 800*1000*2200
1000*800*2200，1000*1000*2200 等

MNS

(经济型)
改进型抽出式开关柜柜体

(Economy type)
Improved withdrawable switchgear cabinet body

MNS(经济型)低压成套开关设备是在标准型的基础上改进研制的产品。适用于交流 50(60)Hz 额定工作电压 660V 及以下的系统，用于发电、配电、电能转换和电能消耗设备的控制。

MNS (economy type) low-voltage switchgear is a product developed and improved on the basis of the standard type. Suitable for systems with a rated working voltage of 660V and below at AC 50 (60) Hz, used for control of power generation, distribution, energy conversion, and energy consumption equipment.



Giantele®
浙柜电气

Giantele®
浙柜电气

符合标准 /Standards compliant

符合国家标准 GB7251.1《低压成套开关设备和控制设备》、JB/T9661《低压抽出式成套开关设备》及国标标准 IEC439。

Complies with national standards GB7251.1 "Low voltage switchgear and control equipment", JB/T9661 "Low voltage withdrawable switchgear", and national standard IEC439.

结构说明 /Structure description

装置基本框架为 C 型材组合式结构，框架的全部结构件都经过镀锌处理或覆铝锌板制作。
通过自攻锁紧螺钉 8.8 级六角螺钉紧固互相连接成基本框架，再按方案变化需要，加上相应的门、封板、隔板、安装支架，以及母线、功能单元等零件，组装成一台完整的装置，装置内零部件尺寸、隔室尺寸，实行模数化（模数单位 E=25m)。垂直通道及一二次接插件均改为 GCK 柜的形式，水平母线也可放置柜顶，顶盖可开启，采用后出线或侧出线方式均可。在保持原有工作性能及外观的同时，实现安全可靠，安装、检测、维修便捷并降低生产成本。柜体防护等级 IP3X-4X。

The basic framework of the device is a C-shaped composite structure, and all structural components of the framework are galvanized or coated with aluminum zinc plate.
By using self tapping locking screws and 8.8 grade hexagonal screws to tighten and connect each other into a basic framework, and then adding corresponding doors, sealing plates, partitions, installation brackets, as well as components such as busbars and functional units according to the needs of the scheme changes, a complete device is assembled. The dimensions of the components and compartments inside the device are modularized (modular unit E=25m). The vertical channel and primary and secondary connectors have been changed to the form of GCK cabinets. The horizontal busbar can also be placed on the top of the cabinet, and the top cover can be opened. Both rear and side outlets can be used. While maintaining its original working performance and appearance, it achieves safety and reliability, convenient installation, testing, and maintenance, and reduces production costs. The cabinet protection level is IP3X-4X.

抽屉类型 /Drawer type

- 抽屉类型：分五种标准尺寸，都是以 8E(200mm) 高度为基准，它们分别为 8E/4,8E/2,8E,16E 和 24E。
- 8E/4: 在 8E(200mm) 高度空间组装 4 个抽屉单元:
- 8E/2: 在 8E(200mm) 高度空间组装 2 个抽屉单元:
- 8E: 在 8E（200mm) 高度空间组装 1 个抽屉单元:
- 16E: 在 16E(400mm) 高度空间组装 1 个抽屉单元:
- 24E: 在 24E（600mm) 高度空间组装 1 个抽屉单元:

单元回路额定电流 600A 以下其中 1/2 单元抽屉最大电流可达到 125A。抽屉安装单元有效高度 1800mm, 相同功能单元的抽屉具有良好的互换性，抽屉进出线根据电流大小采用不同规格的后出式接插件，1/2 单元抽屉与电缆室的转接电流分档采用 FZD 型转单元，抽屉单元设有机械联锁装置，抽屉单元有足够数量的二次接插件。

- Drawer types: There are five standard sizes, all based on a height of 8E (200mm), which are 8E/4,8E/2,8E, 16E, and 24E, respectively.
- 8E/4: Assemble 4 drawer units in a space of 8E (200mm) height:
- 8E/2: Assemble 2 drawer units in a space of 8E (200mm) height:
- 8E: Assemble one drawer unit in a space of 8E (200mm) height:
- 16E: Assemble one drawer unit in a 16E (400mm) height space:
- 24E: Assemble one drawer unit in a 24E (600mm) height space:

The rated current of the unit circuit is below 600A, and the maximum current of 1/2 unit drawer can reach 125A. The effective height of the drawer installation unit is 1800mm, and drawers with the same functional unit have good interchangeability. The drawer inlet and outlet lines use different specifications of rear outlet connectors according to the current size. The transfer current between the 1/2 unit drawer and the cable room is divided into FZD type conversion units, and the drawer unit is equipped with a mechanical interlocking device. The drawer unit has a sufficient number of secondary connectors.

柜体外形尺寸 /Cabinet size

宽 W* 深 D* 高 H=600*800*2200,600*1000*2200
800*800*2200,800*1000*2200
1000*800*2200,1000*1000*2200 等

GCS(II)

改进型
抽出式开关柜柜体

Improved type
Withdrawable switchgear cabinet body

GCS(II) 是在标准型 GCS 基础上改进研制的产品。适用于发电、输电、配电、电能转换和电能消耗设备的控制。

GCS (II) is a product developed and improved on the basis of standard GCS. Applicable to the control of equipment for power generation, transmission, distribution, energy conversion, and energy consumption.

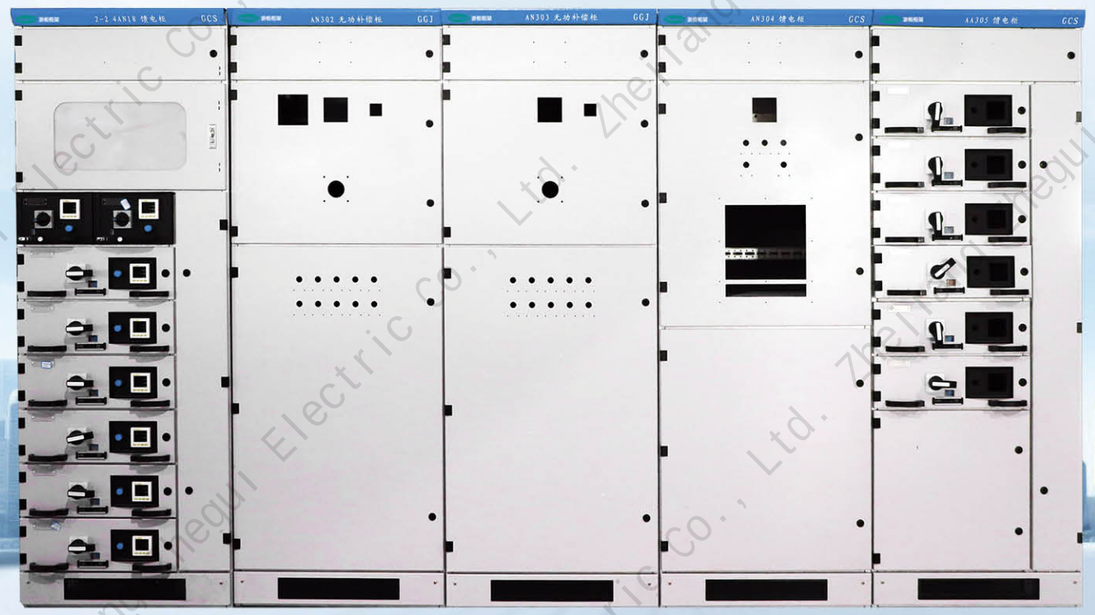

Giantele®
浙柜电气

GCS(II) 改进型抽出式开关柜柜体
Improved type
Withdrawable switchgear cabinet body

Giantele®
浙柜电气

符合标准 /Standards compliant

符合国家标准 GB7251.1《低压成套开关设备和控制设备》、JB/T9661《低压抽出式成套开关设备》及国标标准 IEC439。

Complies with national standards GB7251.1 "Low voltage switchgear and control equipment", JB/T9661 "Low voltage withdrawable switchgear", and national standard IEC439.

结构说明 /Structure description

柜体基本结构由 C 型材组装而成，标准模数 E=25m, 柜体经酸洗磷化后静电喷涂。内部隔板、抽屉全部采用优质敷铝锌板。各功能室相互隔离，其隔离室分为功能单元室、母线室和电缆室，各室的作用相对独立。垂直通道及一二次接插件均改为 GCK 柜的形式，水平母线可放置柜顶，顶盖可开启，采用后出线或侧出线方式均可。在保持原有工作性能及外观的同时，实现安全可靠，安装、检测、维修便捷并降低生产成本。柜体防护等级 IP3X-4X。

The basic structure of the cabinet is assembled from C-shaped profiles, with a standard modulus of E=25m. The cabinet is acid washed and phosphatized before electrostatic spraying. All internal partitions and drawers are made of high-quality aluminum zinc coated panels. Each functional room is isolated from each other, and the isolation room is divided into functional unit room, busbar room, and cable room, with each room playing a relatively independent role. The vertical channel and primary and secondary connectors have been changed to the form of GCK cabinets. The horizontal busbar can be placed on the top of the cabinet, and the top cover can be opened. Both rear and side outlets can be used. While maintaining its original working performance and appearance, it achieves safety and reliability, convenient installation, testing, and maintenance, and reduces production costs. The cabinet protection level is IP3X-4X.

抽屉类型 /Drawer type

我公司专门设计了 150mm 高，电流至 250A 单元抽屉，单台柜最多可装 12 层单元抽屉。抽屉层高的模数为 100mm 时分为 200/2、200、400、600 等模数单元尺寸系列，抽屉安装单元有效高度 1800mm。单元回路额定电流 600A 及以下其中 1/2 单元抽屉最大电流可达到 125A, 相同功能单元的抽屉具有良好的互换性，抽屉进出线根据电流大小采用不同规格的接插件，1/2 单元抽屉与电缆室的转接采用 FZD 型 1/2 分路转接单元，抽屉单元设有机械联锁装置，抽屉单
元有足够数量的二次接插件。

Our company has specially designed unit drawers with a height of 150mm and a current of 250A. A single cabinet can hold up to 12 layers of unit drawers. When the module height of the drawer is 100mm, it is divided into module unit size series such as 200/2, 200, 400, 600, etc. The effective height of the drawer installation unit is 1800mm. The rated current of the unit circuit is 600A or below, and the maximum current of 1/2 unit drawer can reach 125A. Drawers with the same functional unit have good interchangeability. Different specifications of connectors are used for drawer inlet and outlet lines according to the current size. The connection between 1/2 unit drawer and cable room adopts FZD type 1/2 branch connection unit. The drawer unit is equipped with mechanical interlocking device, and the drawer unit is single
Yuan has a sufficient number of secondary connectors.

柜体外形尺寸 /Cabinet size

宽 W* 深 D* 高 H=600*800*2200,600*1000*2200
800*800*2200,800*1000*2200
1000*800*2200,1000*1000*2200 等

GCK

抽出式
开关柜柜体

Pull-out type
Switch cabinet body

GCK 低抽出式开关柜适用于发电厂、变电站、工矿企业和高层建筑等场所，作为交流 380V、频率 50HZ 电力系统的配电和电动机控制之用。
符合标准：IEC439.1,GB7251.1 等。

GCK low extraction switchgear is suitable for power plants, substations, industrial and mining enterprises, and high-rise buildings. It is used for distribution and motor control in AC 380V, 50Hz power systems.
Compliant with standards such as IEC439.1 and GB7251.1.



Giantele®
浙柜电气

型号含义 /Model Meaning



使用环境条件 /Use environmental conditions

- 周围空气温度：上限 +40℃，下限 -10℃；
- 海拔：≤ 2000m;
- 周围相对湿度：日平均值≤ 95%, 月平均值≤ 90%；
- 周围空气：没有明显的尘埃、烟、腐蚀性或可燃性气体、水蒸气或盐的污染；
- 无经常性剧烈震动或常年腐蚀场所。

- Surrounding air temperature: upper limit+40 ℃ , lower limit -10 ℃ ;
- Altitude: ≤ 2000m;
- Relative humidity around: daily average ≤ 95%, monthly average ≤ 90%;
- Surrounding air: There is no obvious pollution of dust, smoke, corrosive or combustible gases, water vapor or salt;
- There is no place with frequent severe vibration or year-round corrosion.

技术参数 /Technical Parameter

项目 project		数据 data
主电路额定电压 (V)Rated voltage of the main circuit (V)		交流 DC380、660
辅助电路额定电压 (V)Rated voltage of auxiliary circuit (V)		交流 DC220、380 直 AC110、220
额定频率 (Hz) Rated frequency (Hz)		50(60)
额定绝缘电压 (V)Rated insulation voltage (V)		660(1000)
额定电流 (A)	水平母线 Horizontal busbar	≤ 4000
	垂直母线 (MCC)Vertical busbar (MCC)	600-1500
母线额定短时耐受电流 (KA,1s) Rated short-term withstand current of busbar (KA, 1s)		50、80
母线额定峰值耐受电流 (KA,0.1s) Rated peak withstand current of busbar (KA, 0.1s)		105、176
工频试验电压 (V/min) Power frequency test voltage (V/min)	主电路 Main circuit	2500
	辅助电路 auxiliary circuit	1760
母线 generatrix	三相四线制 three-phase four-wire system	A、B、C、PEN
	三相五线制 Three-phase five-wire system	A、B、C、PE.N
防护等级		IP30、IP40

结构说明 /Structure description

GCK 框架采用压筋 C 型材（模数 E=25m) 组装而成，框架全部结构都经过镀锌处理，零部件的组装全部用自攻锁紧螺钉或高强度六角螺钉紧固，各个零部件的尺寸均实行模数化，从而保证了各零件的通用性、互换性、再按需要加上门、挡板、隔板、抽屉、安装梁等零件，组装成品后有美观、牢固、质量好等优点。柜体分为母线室、功能单元室、电缆室三个相互隔离区间，可防止事故扩散和便于带电维修。

The GCK framework is assembled using reinforced C-shaped profiles (modulus E=25m), and all structures of the framework are galvanized. The assembly of components is fastened with self tapping locking screws or high-strength hexagonal screws, and the dimensions of each component are modularized, ensuring the universality and interchangeability of each component. Additionally, components such as doors, baffles, partitions, drawers, and installation beams are added as needed. After assembly, the finished product has a beautiful and sturdy appearance Advantages such as good quality. The cabinet is divided into three mutually isolated sections: busbar room, functional unit room, and cable room, which can prevent the spread of accidents and facilitate live maintenance.

功能单元 (抽屉单元)/Functional unit(Drawer unit)

- 抽屉层高的模数为 200mm, 分为 1/2 单元、1 单元、1.5 单元、2 单元、3 单元五个尺寸系列，单元回路额定电流 630A 及以下；
- 每台 MCC 柜最多能安装 9 个一单元抽屉柜或 18 个 1/2 单元的抽屉；
- 隔室的门板由主开关的操作机构与抽屉进行机械连锁，主开关在合闸位置时，抽屉不能抽出；
- 主开关的操作机构可用一把挂锁锁定在合闸或分闸位置，可安全地进行电器设备的维修；
- 抽屉单元采用旋转式推进机构，具有三个位置功能，操作简单可靠；
- 抽屉隔室中采用新型一次进行线罩，抽屉抽出后使之隔室内不会触及垂直母线。

- The module of drawer layer height is 200mm, divided into five size series: 1/2 unit, 1 unit, 1.5 unit, 2 unit, and 3 unit. The rated current of the unit circuit is 630A and below;
- Each MCC cabinet can accommodate up to 9 single unit drawer cabinets or 18 1/2 unit drawers;
- The door panel of the compartment is mechanically interlocked with the drawer by the operating mechanism of the main switch. When the main switch is in the closed position, the drawer cannot be pulled out;
- The operating mechanism of the main switch can be locked with a padlock in the closed or open position, which can safely carry out maintenance of electrical equipment;
- The drawer unit adopts a rotating propulsion mechanism with three position functions, making it easy and reliable to operate;
- A new type of one-time wire cover is used in the drawer compartment, and after the drawer is pulled out, the compartment will not touch the vertical busbar.

母线系统 /Busbar system

- 母线系统采用三相四线制、三相五线制，水平母线装于柜顶，N 线、PE 线既可以装于柜顶，也可以装于柜下部。因水平母线顶置，用户拿掉顶盖可以很方便的安装水平母线；
- 垂直母线采用聚碳酸酯工程塑料壳封闭。

- The busbar system adopts a three-phase four wire system and a three-phase five wire system. The horizontal busbar is installed on the top of the cabinet, and the N and PE wires can be installed on the top or bottom of the cabinet. Due to the top placement of the horizontal busbar, users can easily install the horizontal busbar by removing the top cover;
- The vertical busbar is enclosed with polycarbonate engineering plastic shell.

电缆室 /Cable room

电缆室位于柜后独立隔室中。电缆室中有专用的一、二接线端子及相应的电缆固定件。

根据柜体进出线方式，在底板或顶盖板上冲敲落孔或出线法兰板。

The cable room is located in a separate compartment behind the cabinet. There are dedicated first and second wiring terminals and corresponding cable fixing components in the cable room.

According to the incoming and outgoing methods of the cabinet, punch and tap holes or outlet flange plates on the bottom plate or top cover plate.

GGD(II)

交流
低压配电柜柜体

exchange
Low voltage distribution cabinet body

GGD(II) 型交流低压配电柜适用于发电厂、变电站、工矿企业等电力用户作为交流 50Hz 额定工作电压 380V，额定工作电流 4000A 的配电系统中，作为动力、照明及配电设备的电能转换、分配与控制之用。产品具有分断能力高，动热稳定性好，适用性能强等特点。GGD(II) 型低压配电柜符合国家标准 GB7251.1《低压成套开关设备和控制设备》及国际标准 IEC439。

GGD (II) type AC low-voltage distribution cabinet is suitable for power plants, substations, industrial and mining enterprises and other power users as a distribution system with a rated working voltage of 380V and a rated working current of 4000A at 50Hz. It is used for power conversion, distribution, and control of power, lighting, and distribution equipment. The product has the characteristics of high breaking capacity, good dynamic and thermal stability, and strong applicability.
The GGD (II) low-voltage distribution cabinet complies with the national standard GB7251.1 "Low voltage switchgear and control equipment" and the international standard IEC439.



Giantele®
浙柜电气

Giantele®
浙柜电气

结构说明 /Structure description

柜架用 6F 冷弯型钢材局部焊接拼装而成，其刚性及承载能力均达到电器元件的安装要求，框架上分别有按 E=25mm 和 E=100mm 数排列的安装孔。以提高产品的装配通用性。主母线排列在柜的上部，采用的 PM 型母线夹，用高阻燃树脂热注成型，机械强度和绝缘度高；能承受有效值 50KA，峰值 105KA 电流，热稳定冲击力长期允许温度可达 120℃。柜体防护等级 IP3X。

The cabinet frame is locally welded and assembled with 6F cold-formed steel, and its rigidity and load-bearing capacity meet the installation requirements of electrical components. The frame has installation holes arranged in the order of E=25mm and E=100mm, respectively. To improve the assembly universality of the product. The main busbar is arranged at the upper part of the cabinet, using PM type busbar clamps, which are formed by high flame retardant resin hot injection molding, with high mechanical strength and insulation degree; Can withstand an effective value of 50KA and a peak current of 105KA, with a thermal stable impact force and a long-term allowable temperature of up to 120 ℃ . The cabinet protection level is IP3X.

柜体外形尺寸 /Cabinet size

宽 W* 深 D* 高 H：	600*600*2200	600*800*2200	600*1000*2200
	800*600*2200	800*800*2200	800*1000*2200
	1000*600*2200	1000*800*2200	1000*1000*2200
	1200*600*2200	1200*800*2200	1200*1000*2200

柜体配套辅件 /Cabinet supporting accessories



新式自攻螺丝安装，安装简洁，拆卸方便。
The installation of new self tapping screws is simple and easy to disassemble.

门板与型材贴合紧密，更高的防护等级。
The door panels are tightly fitted to the profiles, providing a higher level of protection.



上 / 下通风板，通风板上固定螺丝均加垫圈包覆，无突兀感，新型明铰链，定位高，强度好。
The upper/lower ventilation panels are wrapped with washers on the fixing screws, without any abrupt feeling. The new type of hinge has high positioning and good strength.



门板加强筋的焊接处理，门板上的加强筋，焊点隐门板四周均包角，提升了门板的整体刚度及强度藏处理，外观上均看不到焊点。
The welding treatment of the door panel reinforcement ribs, the reinforcement ribs on the door panel, and the hidden welding points are all wrapped around the corners of the door panel, improving the overall stiffness and strength of the door panel. The hidden treatment does not show any welding points on the appearance.



侧片由内部向外安装，即简洁，又美观可靠，全新设计的“溜背式”锁盖，提升了外观档次全新设计的防掉角滚轮，滚动摩擦，门板关合省力。
The side panels are installed from the inside out, which is simple, beautiful, and reliable. The newly designed "sliding back" lock cover enhances the appearance level. The newly designed anti falling angle roller reduces rolling friction and saves effort in closing the door panel.

Zhejiang Zhegui Electric Co., Ltd.

5G
基站
电源配电柜

Base station
power distribution cabinet

通信基站户外一体化机柜由钣金框架 +45mm 厚 EPS 夹芯板组装而成，防雨、防尘、抗腐蚀。整机包含机柜、1500W 工业空调、嵌入式开关电源、照明 LED 灯备电电池组。

The outdoor integrated cabinet of the communication base station is assembled from a sheet metal frame+45mm thick EPS sandwich panel, which is rainproof, dustproof, and corrosion-resistant. The whole machine includes a cabinet, a 1500W industrial air conditioner, an embedded switch power supply, and a backup battery pack for lighting LED lights.



Giantele®
浙柜电气

Giantele®
浙柜电气

技术参数 /Technical Parameter

名称 name	分类 classification	参数 parameter
机柜 Cabinet	尺寸 size	外尺寸 Outer Dimensions：H*W*D=2100mm*900mm*900mm
		内尺寸 inside dimension：H*W*D=1800mm*800mm*800mm
	布局 layout	1 单元 1 舱、19 英寸机架 +1 层电池架 1 unit, 1 compartment, 19 inch rack+1 layer battery rack
	设备安装方式 Equipment installation method	落地式底座固定安装 Fixed installation of floor standing base
	门 door	前开门，户外柜专用锁（支持挂锁） Front door opening, dedicated lock for outdoor cabinets (supports padlocks)
	材质 material quality	整机采用专业户外粉喷涂、外板厚度 1.2mm 冷轧钢板，底座 2.0mm The whole machine adopts professional outdoor powder spraying, with an outer plate thickness of 1.2mm cold-rolled steel plate and a base of 2.0mm
	保温层 Insulation layer	45mm 厚 thickEPS
	整体结构 Overall structure	拼装 Assembly
	防护等级 protection grade	IP55
温控 temperature control	制冷散热 Cooling and heat dissipation	1500W 工业空调 Industrial air conditioning
供电 power supply	单相三线 Single phase three wire	AC220V
备电 Backup power	150Ah 电池组 battery pack	一组 48V 150Ah 铅酸蓄电池（一组为 4 块） A set of 48V 150Ah lead-acid batteries (4 pieces per set)
开关电源 switch power supply	200A	19 英寸 6U 高嵌入式插框，满配 200A 交流输入：63A/2P*1 C 级防雷 交流输出：16A/1P*2 直流配电单元： 电池开关：125A/1P*4 一次下电：63A/1P*2，32A/1P*4，25A/1P*2；二次下电：10A/1P*2 监控模块：SM32E（带以太网接口，RS485/LAN 通信功能） 整流模块：50A/-53.5V 输出，效率 92% 19 inch 6U high embedded frame, fully equipped with 200A AC input: 63A/2P * 1 C-level lightning protection AC output: 16A/1P * 2 DC distribution unit: Battery switch: 125A/1P * 4 Power off at once: 63A/1P * 2, 32A/1P * 4, 25A/1P * 2; Secondary power-off: 10A/1P * 2 Monitoring module: SM32E (with Ethernet interface and RS485/LAN communication function) Rectification module: 50A/-53.5V output, efficiency 92%
照明 lighting	LED 灯 lamp	220V LED 灯 lamp
温度 temperature	温度 temperature	工作温度范围 Working temperature range-40℃～ +55℃
		贮存温度范围 Storage temperature range-50℃～ +70℃
		运输温度范围 Transportation temperature range-50℃～ +70℃
湿度 humidity	相对湿度 relative humidity	5%~95%
压力 pressure	大气压力 atmospheric pressure	62kpa ~ 101kpa（近似于海拔 Approximately at altitude0m ~ 5000m）
辐射强度 radiation intensity	太阳辐射强度 Solar radiation intensity	1120×(1±5%)W/m^2

直流
分体式充电桩

Base station
power distribution cabinet

柔性直流分体式充电堆由充电堆整流柜和充电堆终端组成：为模块化配置。充电堆采用充电功率柔性分配技术，可根据新能源汽车充电需求进行功率智能分配，智能识别高、低压自动分配输出功率，可满足各种车型、不同功率的充电需求，任意直流模块可调至任意充电桩。在满足首先接入充电车辆功率需求的前提下，可以根据充电过程中功率需求变化，智能分配多余功率，给后接入的充电车辆，可实现全矩阵充电。

The flexible DC split charging stack consists of a charging stack rectifier cabinet and a charging stack terminal: it is a modular configuration. The charging stack adopts flexible charging power distribution technology, which can intelligently allocate power according to the charging needs of new energy vehicles. It can intelligently identify high and low voltage and automatically allocate output power to meet the charging needs of various vehicle models and different powers. Any DC module can be adjusted to any charging station. On the premise of meeting the power demand of the first connected charging vehicle, excess power can be intelligently allocated according to changes in power demand during the charging process, and full matrix charging can be achieved for the later connected charging vehicles.



Giantele®
浙柜电气

Giantele®
浙柜电气

直流充电堆（终端）技术参数 /Technical parameters of DC charging stack (terminal)

名称 name	技术指标 Technical Index		
产品型号 Model	COTB-ZD250	COTB-ZD250/2	COTB-ZD600
输出电流 output current	0-250A	0-250A	0-600A
输出枪数 Output gun count	1 把 grasp	2 把 grasp	1 把 grasp
输出电压范围 Output voltage range	200-750/1000VDC	200-750/1000VDC	200-750/1000VDC
恒功率输出电压范围 Constant power output voltage range	300-750/1000VDC	300-750/1000VDC	300-750/1000VDC
额定输出功率 Rated output power	60kw	60kw	/
最大输出功率 Maximum output power	180kw/250KW	2*180kw/250KW	450KW/600kW
进线电缆 Incoming cable	YJV22-0.6/1-2*95+1*50	YJV22-0.6/1-4*95+1*50	YJV22-0.6/1-2*240+1*120
辅助电源 Auxiliary power supply	12/24V/YJV-2*2.5		
充电方式 Charging method	全功率充、AB 均充 Full power charging and AB equalization charging		
人机界面 interface	7 英寸触摸显示屏 7-inch touch screen display		
联网方式 Networking methods	以太网、4G(选配)Ethernet, 4G (optional)		
充电模式 charge mode	自动充满、按时间、按电量、按金额 Automatic charging, by time, by battery, by amount		
启动方式 start mode	刷 IC 卡、微信扫码、VIC、密码 Swipe IC card, scan WeChat code, VIC, password		
平台管理 Platform Management	支持云快充、蔚景云、达克云、E 充电、欧迪森 Supports cloud fast charging, NIO Cloud, DakCloud, E-charging, and Odyson		
枪线长度 Gun thread length	5 米（含枪头）5 meters (including gun head)		
保护功能 Protection function	充电枪温度检测、过压保护、欠压保护、过载保护、短路保护、接地保护、过温保护、低温保护、绝缘监测保护、极性反接保护、防雷保护、急停保护、漏电保护 Temperature detection, overvoltage protection, undervoltage protection, overload protection, short circuit protection, grounding protection, over temperature protection, low temperature protection, insulation monitoring protection, polarity reversal protection, lightning protection, emergency stop protection, and leakage protection for charging guns		
与整流柜通信方式 Communication method with rectifier cabinet	CAN 通信 communication/RVVP-4*1.5		
设计标准 Design standards	GB/T18487、GB/T20234		
外形尺寸 (W*H*D)	400*1600*330mm		
电能计量 Energy Measurement	1.0 级，符合 GB 标准 Level 1.0, in compliance with GB standards		
绝缘电阻 insulation resistance	≥ 20MΩ		
噪音 noise	≤ 65dB		
防护等级 protection grade	IP54		
使用环境 Usage environment	室内或室外 Indoor or outdoor		
冷却方式 Cooling method	风冷 forced air cooling		
运行温度 Operating temperature	-20℃ ~+50℃		
存储温度 storage temperature	-40℃ ~+70℃		
相对湿度 relative humidity	5%-95% 无凝露 No condensation		
海拔高度 altitude	≤ 2000m		
安装方式 Installation method	落地 to ground		

一体式
直流充电桩

Integrated DC
charging station

直流充电桩把 AC380V 三相交流电转化为直流电，通过标准直流充电插头和充电插座输送给车辆，直接给汽车动力电池充电。产品适用于公交车、出租车、公务车、环卫车、物流车、轿车等各类新能源电动汽车。

The DC charging station converts AC380V three-phase AC power into DC power, which is transmitted to the vehicle through standard DC charging plugs and sockets, directly charging the car's power battery. The product is suitable for various new energy electric vehicles such as buses, taxis, government vehicles, sanitation vehicles, logistics vehicles, sedans, etc.



Giantele®
浙柜电气

Giantele®
浙柜电气

技术参数 /Technical Parameter

名称 name	技术指标 Technical Index					
单枪产品型号 Single gun product model	COTB-40A	COTB-60A	COTB-80A	COTB-120A	COTB-160A	COTB-180A
双枪产品型号 Dual gun product model	COTB-40A/2	COTB-60A/2	COTB-80A/2	C0TB-120A/2	COTB-160A/2	COTB-180A/2
额定功率 rated power	40kw	60kw	80kw	120kw	160kw	180kw
约重量 Approximately weight	200kg	240kg	260kg	300kg	340kg	380kg
设计标准 Design standards	GB/T18487、GB/T20234					
单枪最大输出电流 Maximum output current of a single gun	0-200A		0-250A			
双枪最大输出电流 Maximum output current of dual guns	400A		500A			
外形尺寸 External dimensions(W*H*D)	680*1700*570(mm)					
人机界面 interface	7 英寸触摸显示屏 7-inch touch screen display					
联网方式 Networking methods	以太网、4G(选配)Ethernet, 4G (optional)					
充电模式 charge mode	自动充满、按时间、按电量、按金额 Automatic charging, by time, by battery, by amount					
启动方式 start mode	刷 IC 卡、微信扫码、VIC、密码 Swipe IC card, scan WeChat code, VIC, password					
平台管理 Platform Management	支持云快充、蔚景云、达克云、E 充电、欧迪森 Supports cloud fast charging, NIO Cloud, DakCloud, E-charging, and Odyson					
保护功能 Protection function	充电枪温度检测、过压保护、欠压保护、过载保护、短路保护、接地保护、过温保护、低温保护、绝缘监测保护、极性反接保护、防雷保护、急停保护、漏电保护 Temperature detection, overvoltage protection, undervoltage protection, overload protection, short circuit protection, grounding protection, over temperature protection, low temperature protection, insulation monitoring protection, polarity reversal protection, lightning protection, emergency stop protection, and leakage protection for charging guns					
输入电压 Input Voltage	AC380V±15%					
输入频率 input frequency	50Hz±10%					
枪线长度 Gun thread length	5 米（含枪头）5 meters (including gun head)					
输出电压范围 Output voltage range	DC150-750V(1000V) 选择可调 Select adjustable					
输出电压误差 output voltage error	≤ ±0.5%					
输出电流误差 Output current error	≤ ±1%					
稳压精度 Voltage stabilization accuracy	≤ ±0.5%					
稳流精度 stabilized current precision	≤ ±1%					
谐波含量 Harmonic content	≤ 5%					
功率因数 Power factor	≥ 0.99					
效率 efficiency	≥ 95%					
电能计量 Energy Measurement	1.0 级，符合 GB 标准 Level 1.0, in compliance with GB standards					
绝缘电阻 insulation resistance	≥ 20MΩ					
噪音 noise	≤ 65dB					
防护等级 protection grade	IP54					
使用环境 Usage environment	室内或室外 Indoor or outdoor					
冷却方式 Cooling method	风冷 forced air cooling					
运行温度 Operating temperature	-20℃ ~+50℃					
存储温度 storage temperature	-40℃ ~+70℃					
相对湿度 relative humidity	5%-95% 无凝露 No condensation					
海拔高度 altitude	≤ 2000m					
安装方式 Installation method	落地 to ground					

Zhejiang Zhegui Electric Co., Ltd.

小型化
一体式直流充电桩

Miniaturized
integrated DC charging station

直流充电桩把 AC380V 三相交流电转化为直流电，通过标准直流充电插头和充电插座输送给车辆，直接给汽车动力电池充电。产品适用于公交车、出租车、公务车、环卫车、物流车、轿车等各类新能源电动汽车。

The DC charging station converts AC380V three-phase AC power into DC power, which is transmitted to the vehicle through standard DC charging plugs and sockets, directly charging the car's power battery. The product is suitable for various new energy electric vehicles such as buses, taxis, government vehicles, sanitation vehicles, logistics vehicles, sedans, etc.



Giantele®
浙柜电气

Giantele®
浙柜电气

技术参数 /Technical Parameter

名称 name	技术指标 Technical Index		
产品型号 Model	COTB-20A	COTB-30A	COTB-40A
额定功率 rated power	20kw	30kw	40kw
约重量 Approximately weight	80kg	90kg	100kg
设计标准 Design standards	GB/T18487、GB/T20234		
单枪最大输出电流 Maximum output current of a single gun	0-100A		
外形尺寸 External dimensions(W*H*D)	450*1600*330mm		
人机界面 interface	7 英寸触摸显示屏 7-inch touch screen display		
联网方式 Networking methods	以太网、4G(选配)Ethernet, 4G (optional)		
充电模式 charge mode	自动充满、按时间、按电量、按金额 Automatic charging, by time, by battery, by amount		
启动方式 start mode	刷 IC 卡、微信扫码、VIC、密码 Swipe IC card, scan WeChat code, VIC, password		
平台管理 Platform Management	支持云快充、蔚景云、达克云、E 充电、欧迪森 Supports cloud fast charging, NIO Cloud, DakCloud, E-charging, and Odyson		
保护功能 Protection function	充电枪温度检测、过压保护、欠压保护、过载保护、短路保护、接地保护、过温保护、低温保护、绝缘监测保护、极性反接保护、防雷保护、急停保护、漏电保护 Temperature detection, overvoltage protection, undervoltage protection, overload protection, short circuit protection, grounding protection, over temperature protection, low temperature protection, insulation monitoring protection, polarity reversal protection, lightning protection, emergency stop protection, and leakage protection for charging guns		
输入电压 Input Voltage	AC380V±15%		
输入频率 input frequency	50Hz±10%		
枪线长度 Gun thread length	5 米（含枪头）5 meters (including gun head)		
输出电压范围 Output voltage range	DC150-750V(1000W) 选择可调 Select adjustable		
输出电压误差 output voltage error	≤ ±0.5%		
输出电流误差 Output current error	≤ ±1%		
稳压精度 Voltage stabilization accuracy	≤ ±0.5%		
稳流精度 stabilized current precision	≤ ±1%		
谐波含量 Harmonic content	≤ 5%		
功率因数 Power factor	≥ 0.99		
效率 efficiency	≥ 95%		
电能计量 Energy Measurement	1.0 级，符合 GB 标准 Level 1.0, in compliance with GB standards		
绝缘电阻 insulation resistance	≥ 20MΩ		
噪音 noise	≤ 65dB		
防护等级 protection grade	IP54		
使用环境 Usage environment	室内或室外 Indoor or outdoor		
冷却方式 Cooling method	风冷 forced air cooling		
运行温度 Operating temperature	-20℃ ~+50℃		
存储温度 storage temperature	-40℃ ~+70℃		
相对湿度 relative humidity	5%-95% 无凝露 No condensation		
海拔高度 altitude	≤ 2000m		
安装方式 Installation method	落地 to ground		